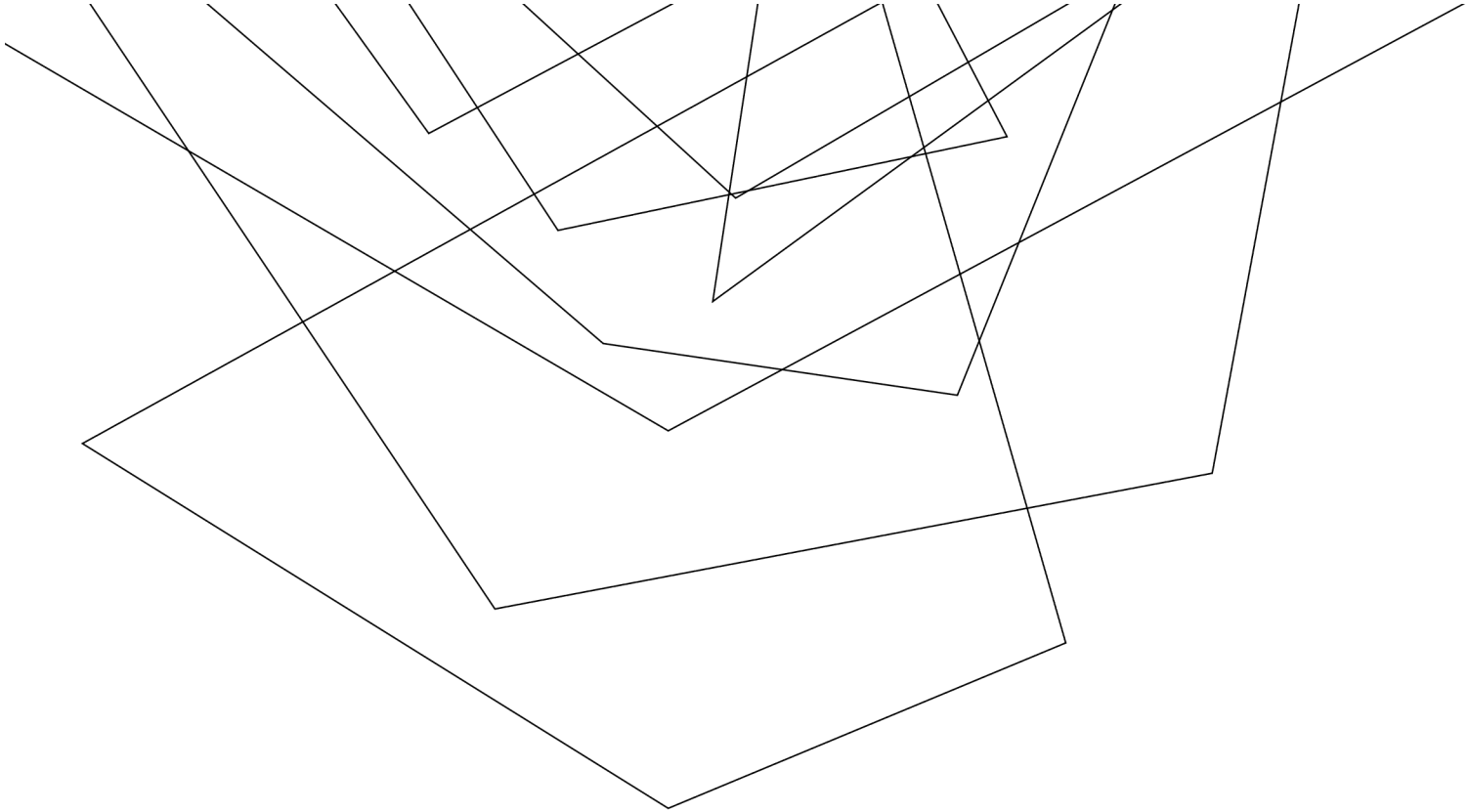

PROTECTION AND CONTROL CHALLENGES ASSOCIATED WITH IMPLEMENTATION OF THREE-PHASE ELECTRIC VEHICLE CHARGING STATIONS

Aleksandar Vukojevic, P.E., PhD and Justin Smith, P.E.

AGENDA

- DC Fast Charger architecture
- Principals of Protection and Control
- Challenges with adding Fast DC Charging Stations
- Power Quality Challeneges
- Conclusion

INTRODUCTION – ELECTRIC VEHICLE CHARGING STATIONS

ELECTRIC VEHICLE CHARGER OVERVIEW

	Level 1	Level 2	DC Fast Charging
Connector Type	J1772 connector 	J1772 connector 	CCS connector  CHAdeMO connector  Tesla connector 
Typical Power Output	1 kW	7 kW - 19 kW	50 - 350 kW
Estimated Light-Duty PHEV Charge Time from Empty[1] (for 8kWh battery)	5 - 6 hours	1 - 2 hours	N/A
Estimated Light-Duty BEV Charge Time from Empty[2] (for 60kWh battery)	40 - 50 hours	4 - 10 hours	20 minutes - 1 hour[3] to 80% charge
Estimated Electric Range per Hour of Charging	2 - 5 miles	10 - 20 miles	180 - 240 miles
Typical Locations	Home	Home, Workplace, and Public	Public

Source: Electric Vehicle Charger Levels and Speeds | US Department of Transportation

DC FAST CHARGING

DC FAST CHARGER ARCHITECTURES

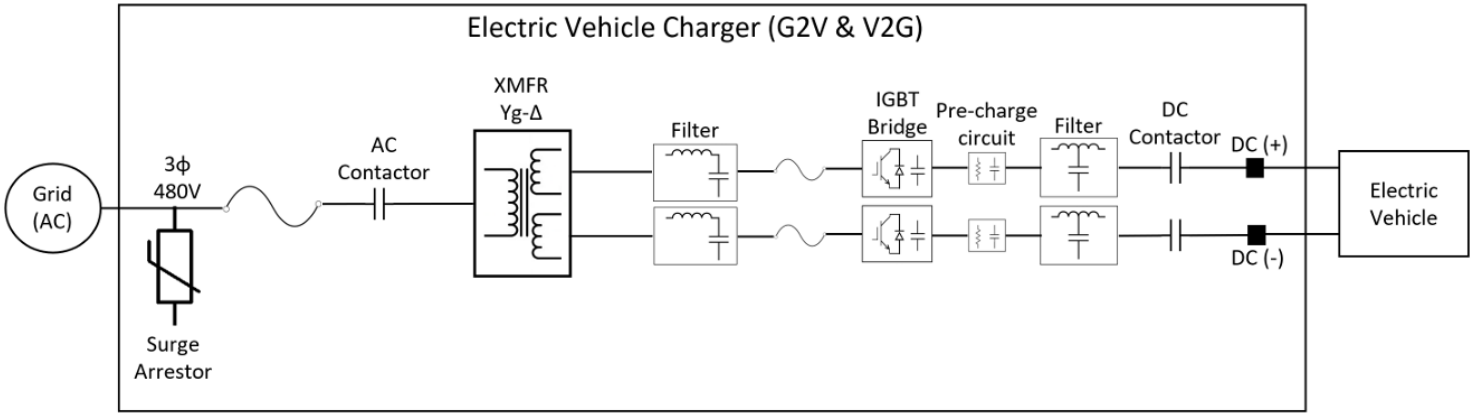

Topology #1 – Low-frequency transformer

DC FAST CHARGER ARCHITECTURES

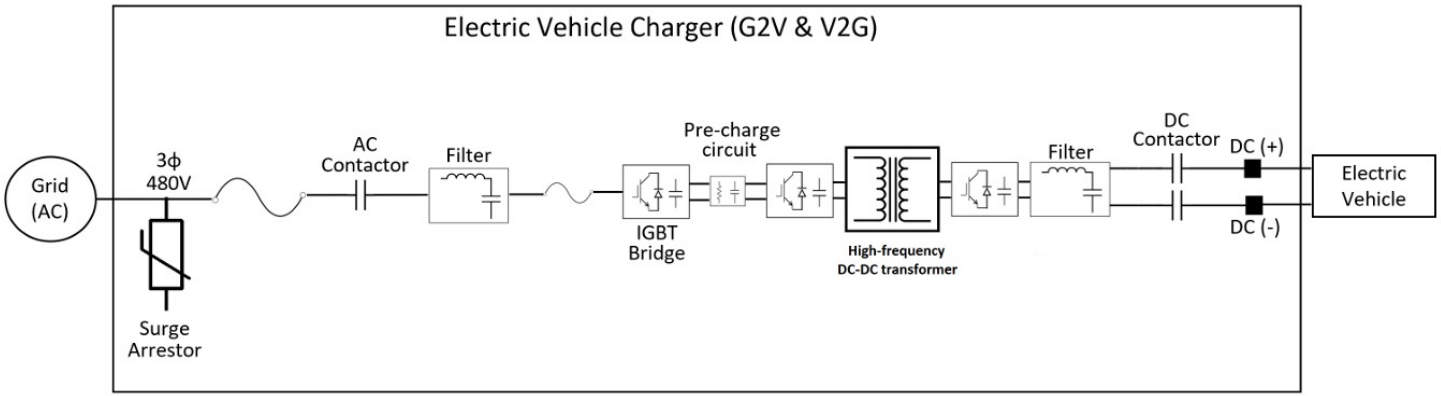

Topology #2 – High-frequency DC-DC transformer

REAL LIFE EXAMPLE

ADDITION OF THE NEW EV CHARGING LOAD

- 13.8kV distribution feeder with 9MVA normal capacity rating
- Peak load: 4MVA
- New Customer load: 12 fast charging stations @ 250kW each (total: 3MW)
- Can we connect the new EV load to this feeder?

IT DEPENDS !!!

Who is answering this question:

- Account manager
- Distribution Planning engineer
- Protection & Controls engineer
- Power Quality (PQ) engineer

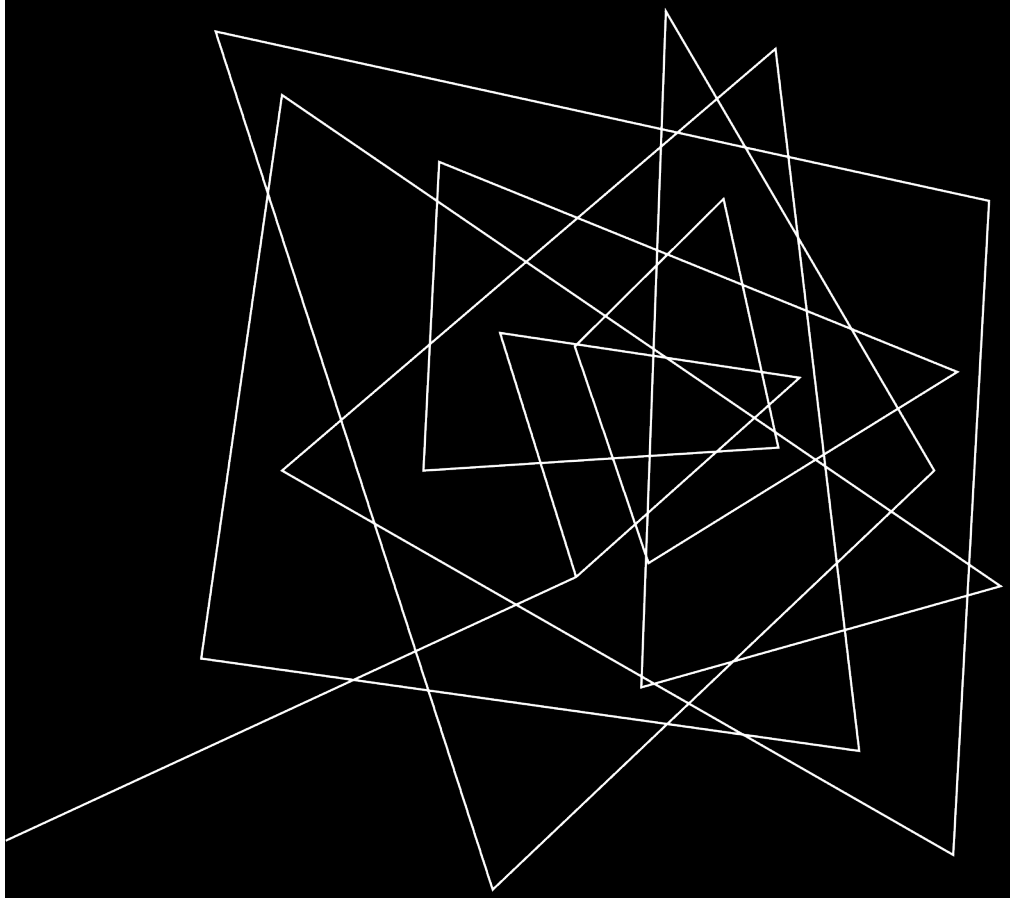

PRINCIPALS OF FEEDER PROTECTION AND RELAYING

DISTRIBUTION FEEDER – NORMAL OPERATING CONDITION

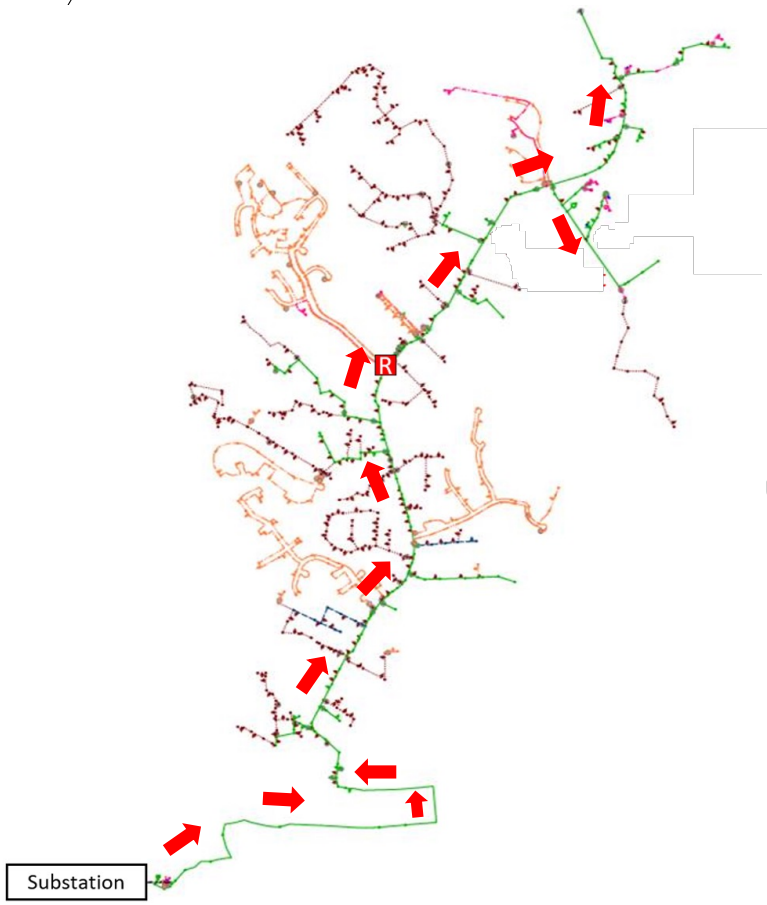

Distribution Feeder

What happens to the unbalanced current?

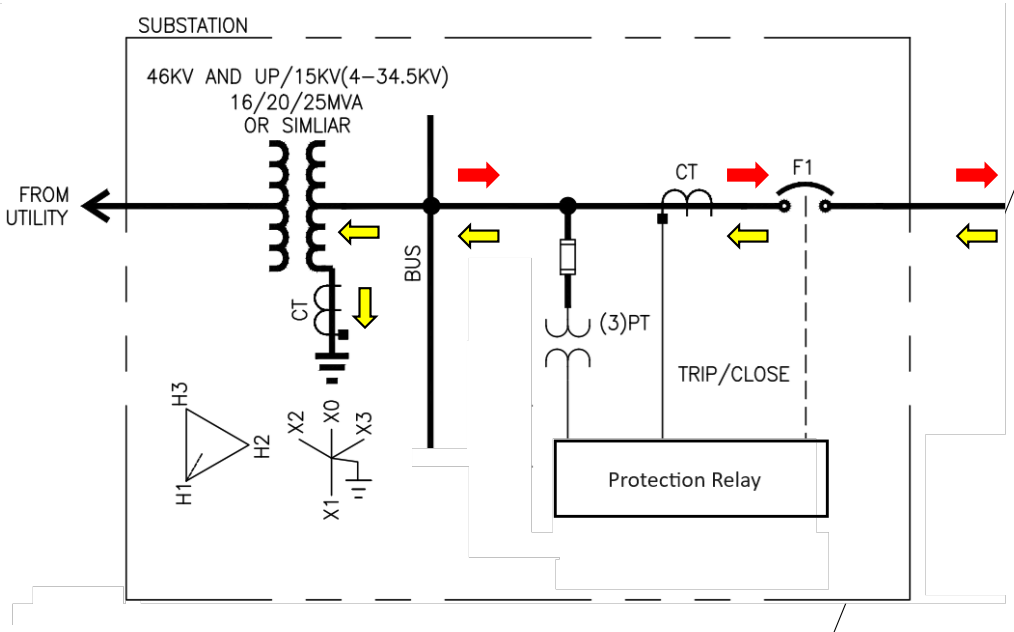

DISTRIBUTION FEEDER – ADDING DC FAST CHARGING STATION

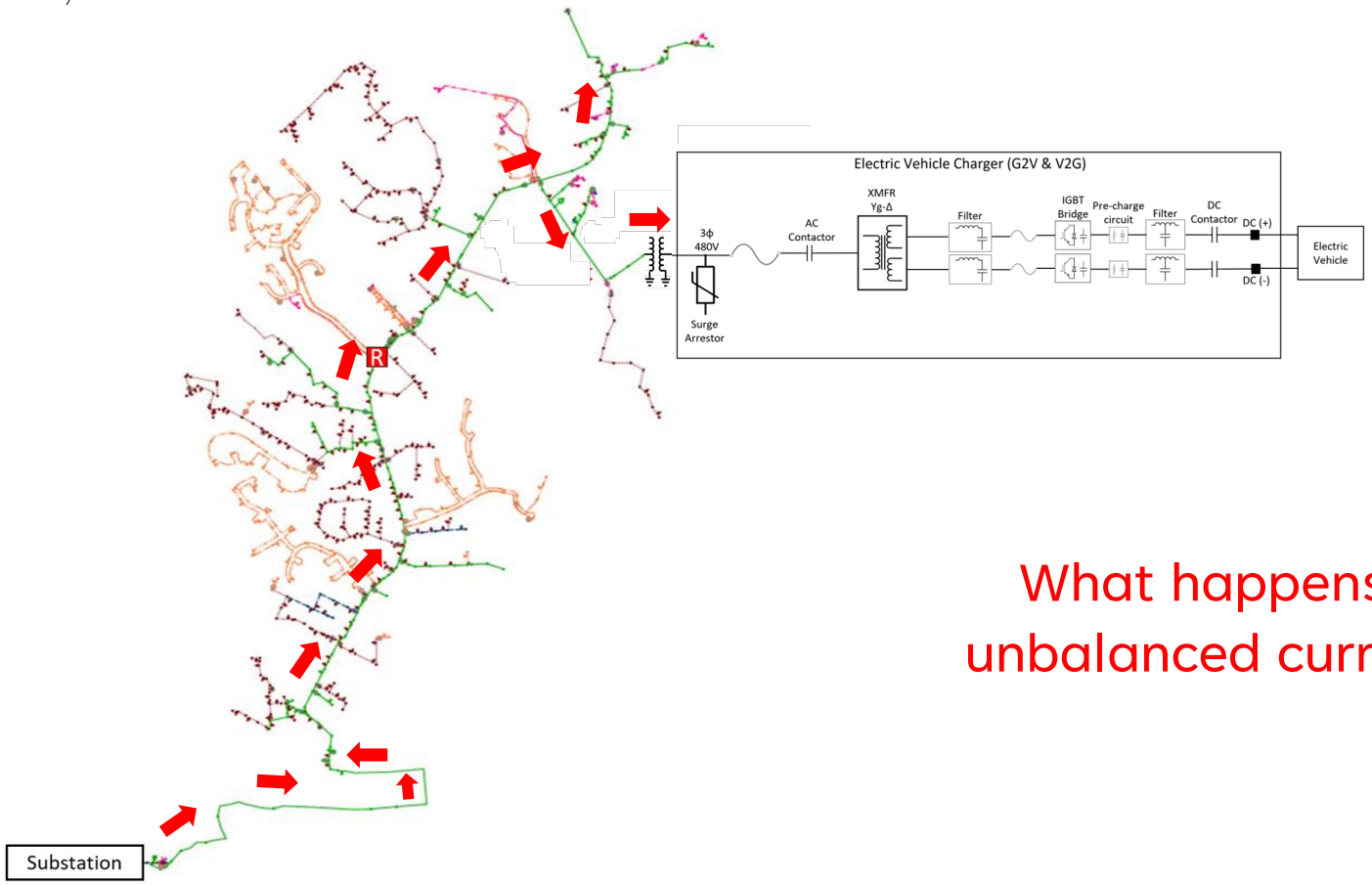

Distribution Feeder

What happens to the unbalanced current now?

DISTRIBUTION FEEDER – ADDING DC FAST CHARGING STATION

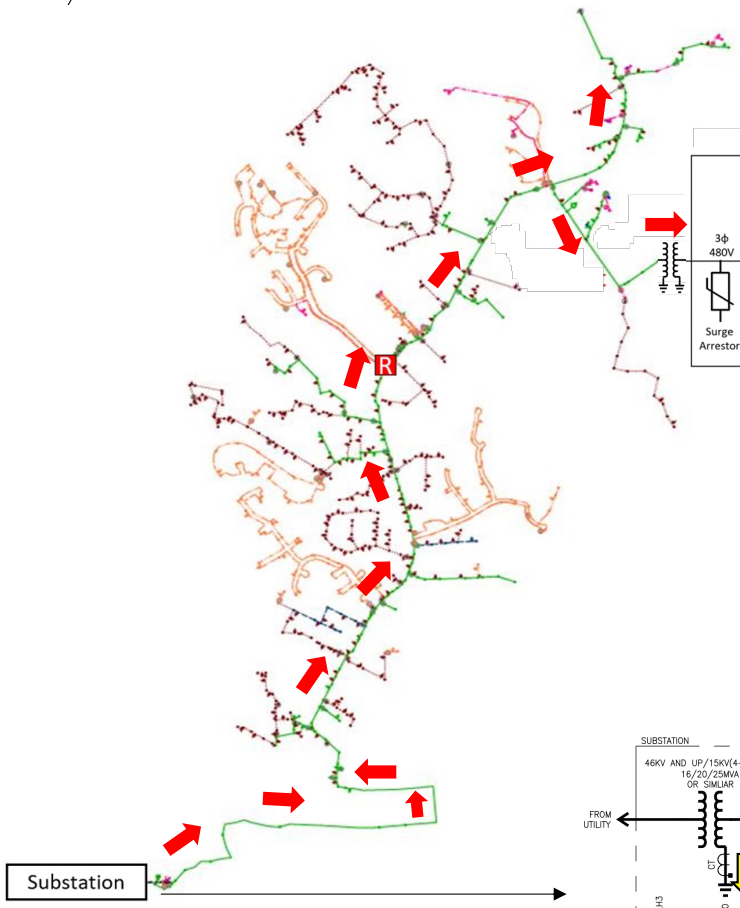

Distribution Feeder

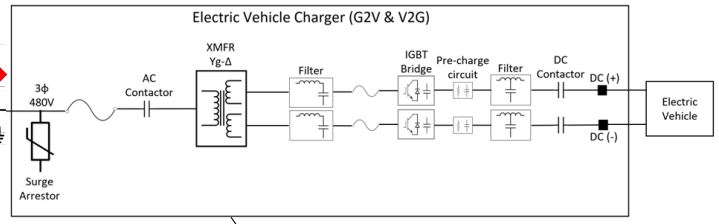

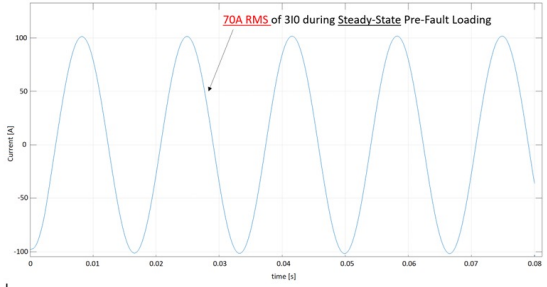

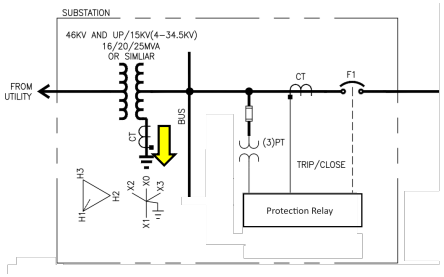

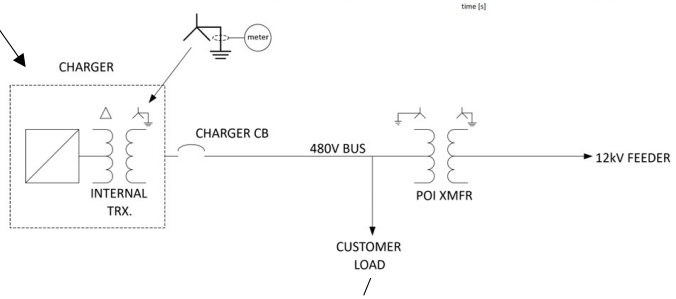

THE ART AND SCIENCE OF PROTECTIVE RELAYING – ZERO-SEQUENCE EQUIVALENT CIRCUIT

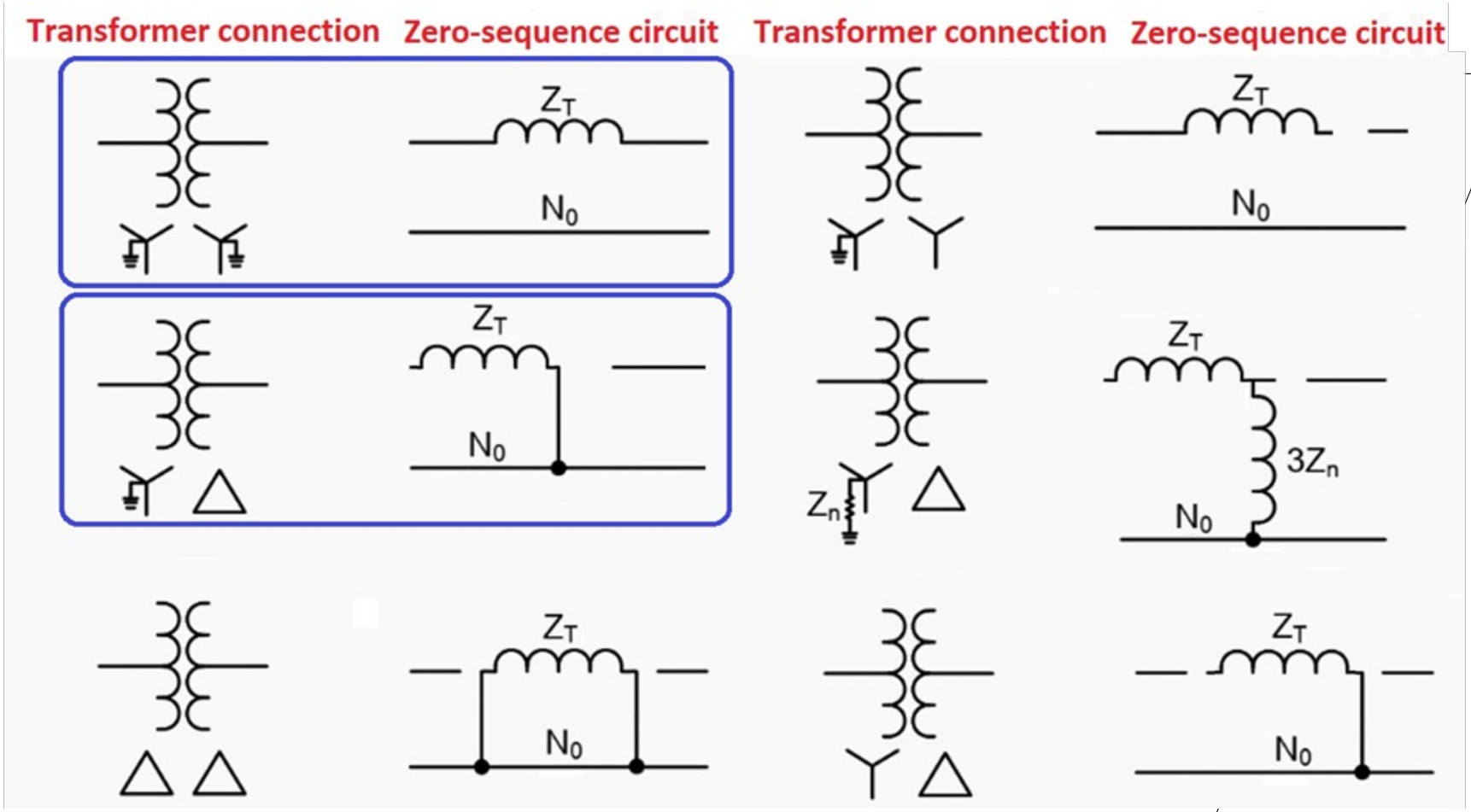

THE ART AND SCIENCE OF PROTECTIVE RELAYING – ZERO-SEQUENCE EQUIVALENT CIRCUIT

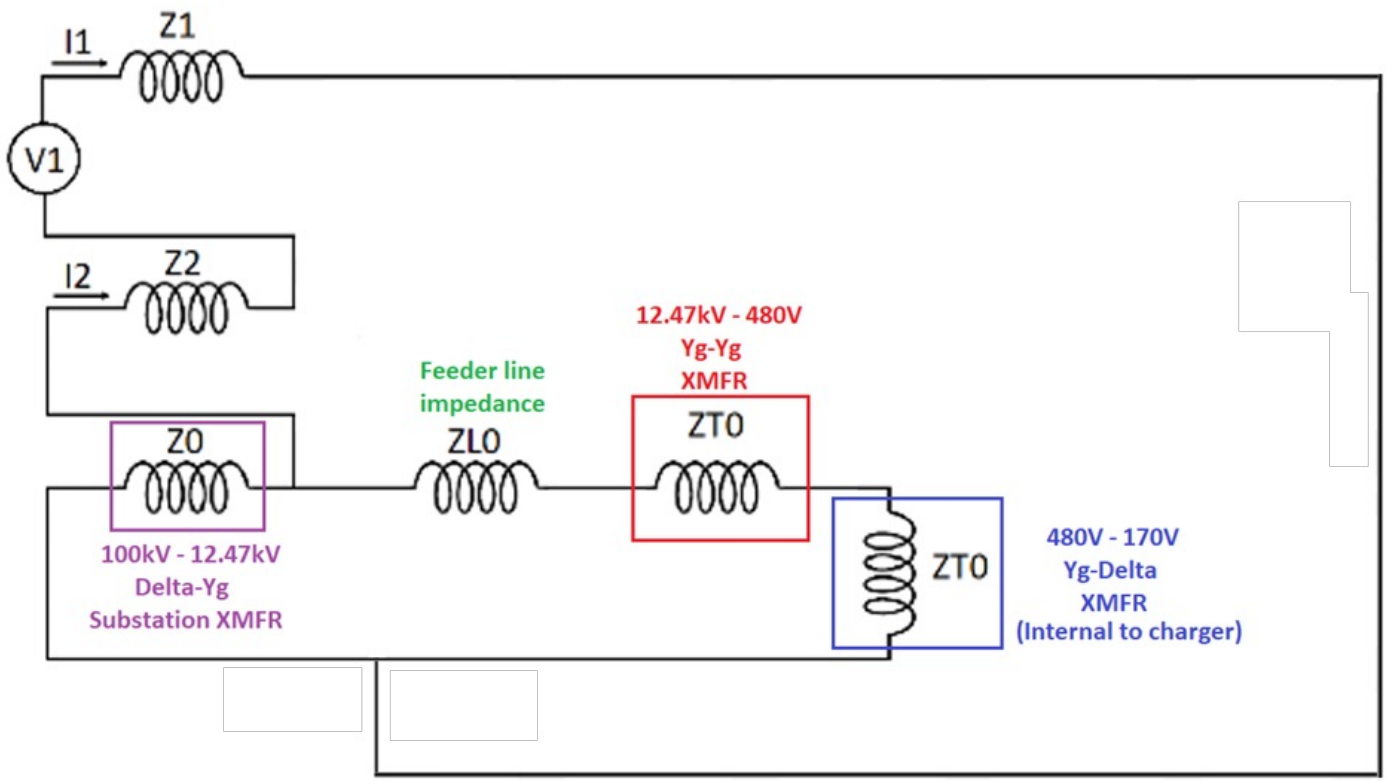

DISTRIBUTION FEEDER – GROUND FAULT

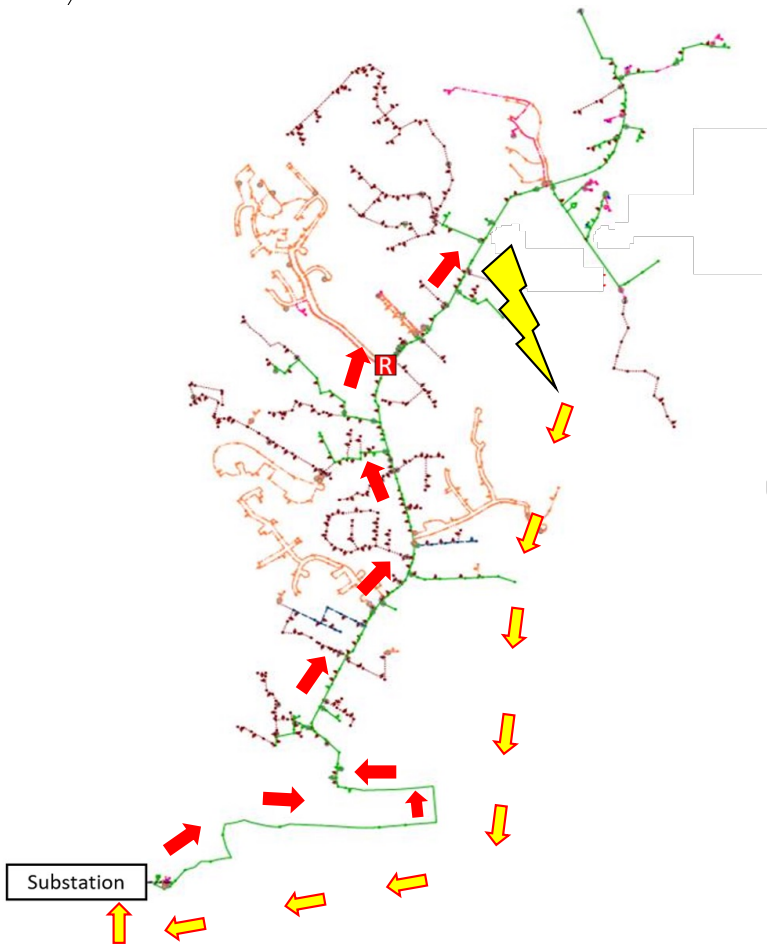

Distribution Feeder

What happens to the fault current?

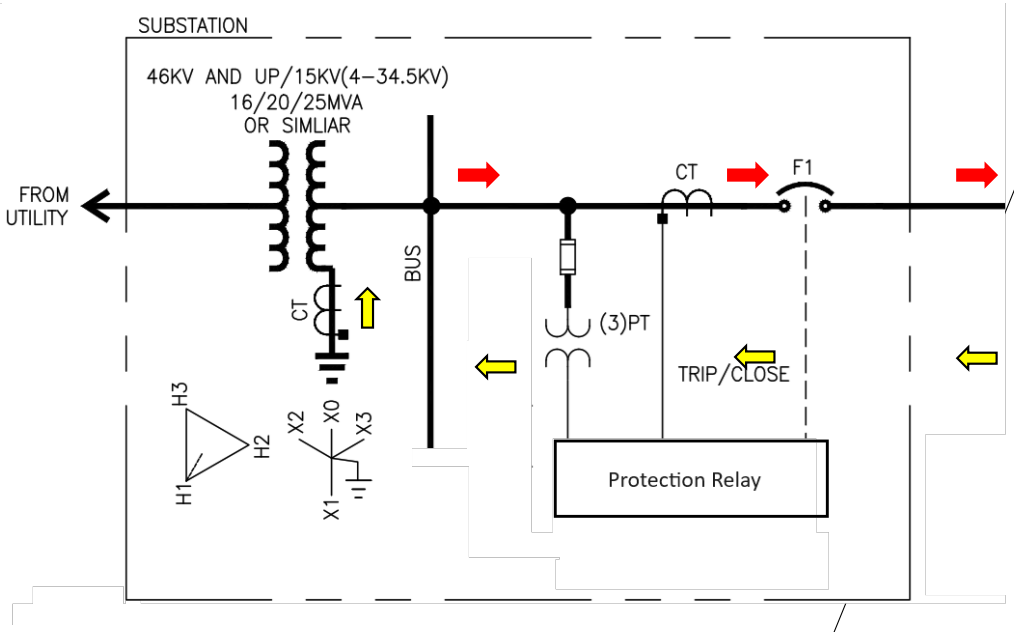

DISTRIBUTION FEEDER – GROUND FAULT

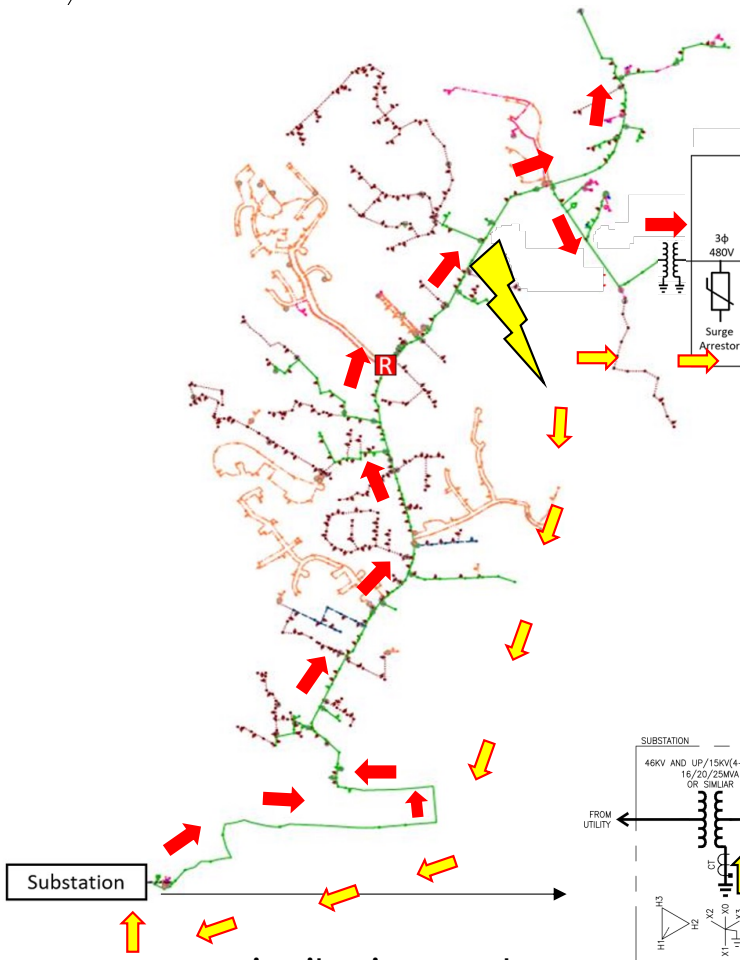

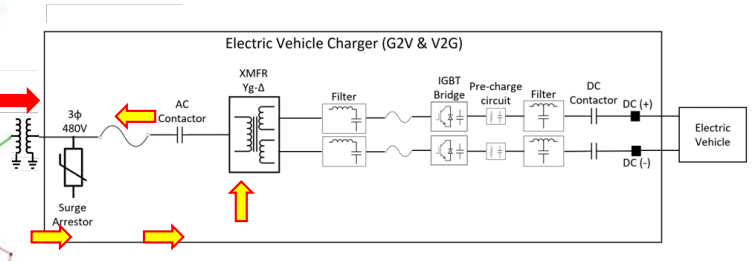

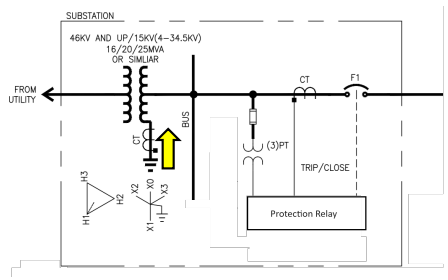

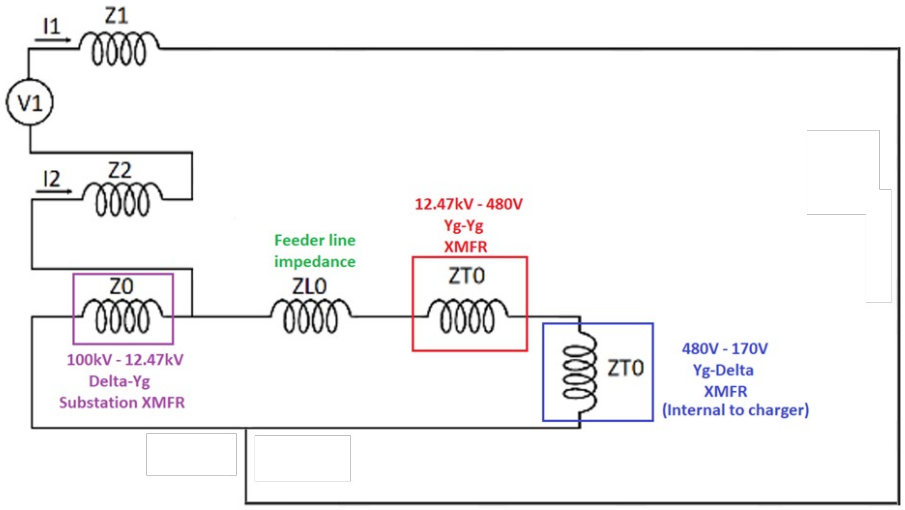

DISTRIBUTION FEEDER – GROUND FAULT

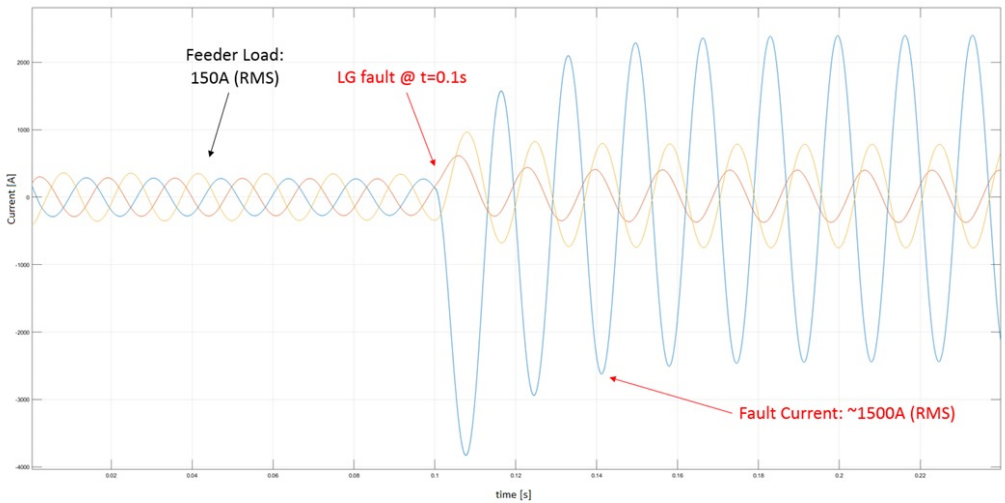

Ground fault current seen by the mid-point recloser

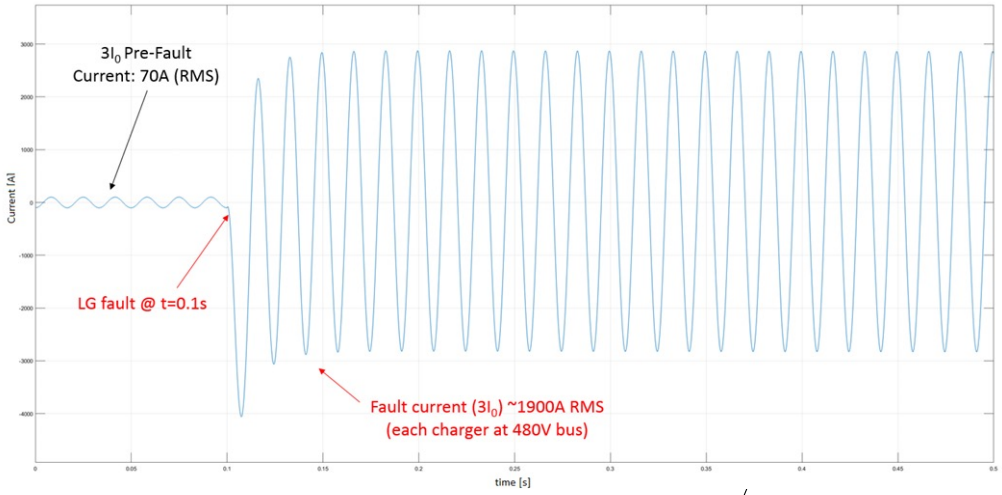

Charger neutral current (3I0) during line-to-ground fault on the feeder - no protection

DISTRIBUTION FEEDER – GROUND FAULT

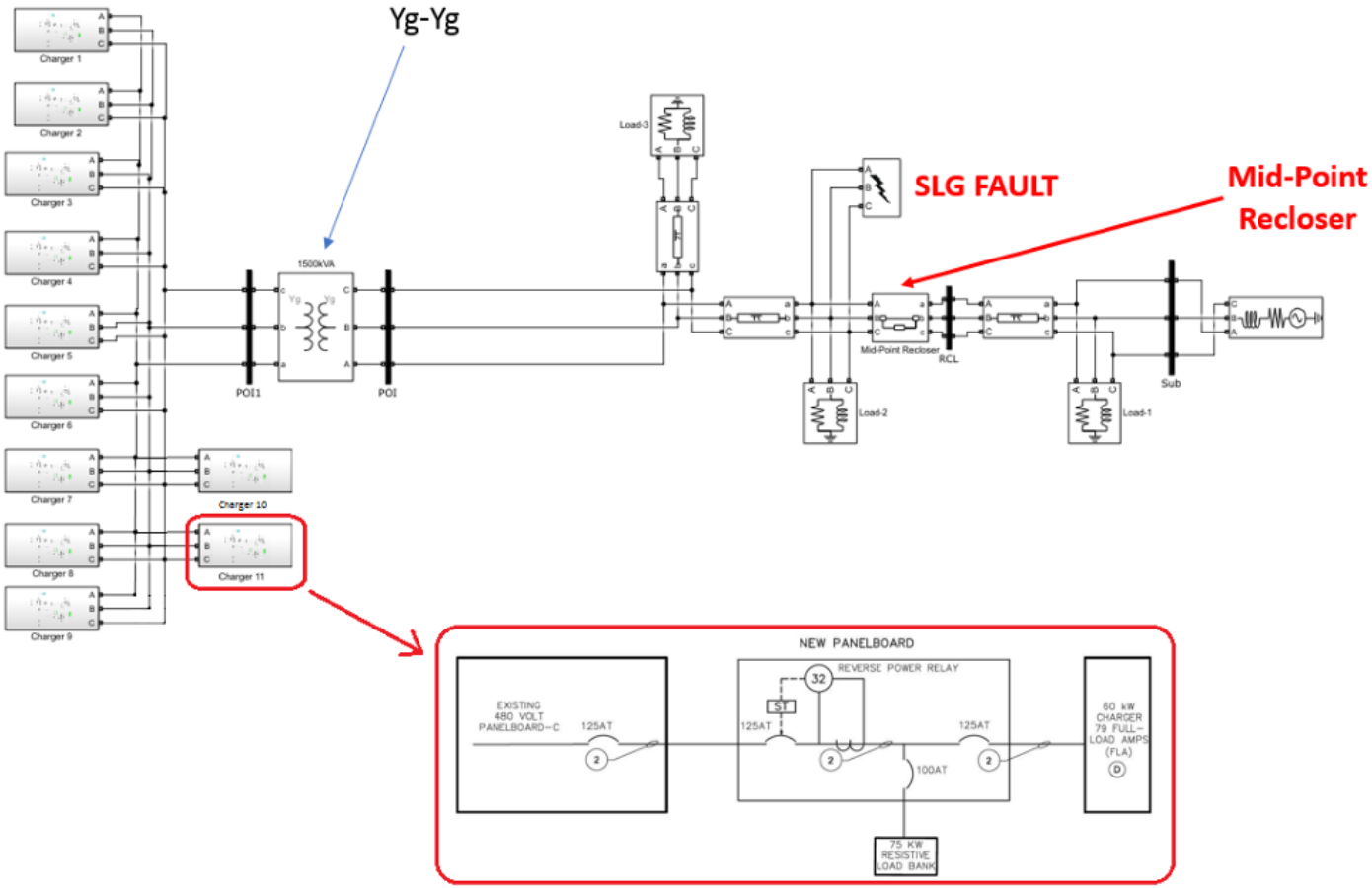

Distribution feeder model with fast charging station - LG fault

DISTRIBUTION FEEDER – GROUND FAULT

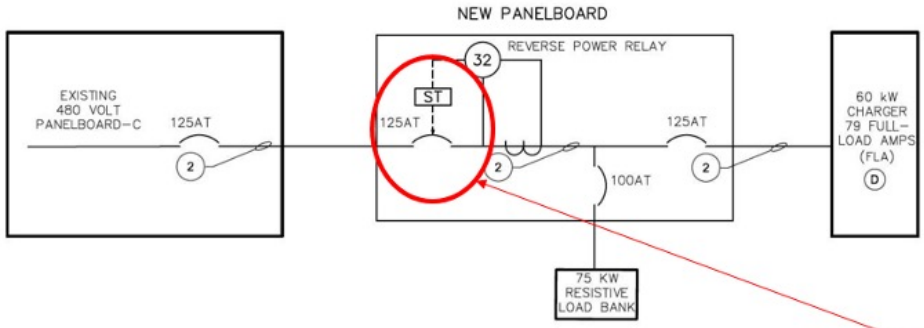

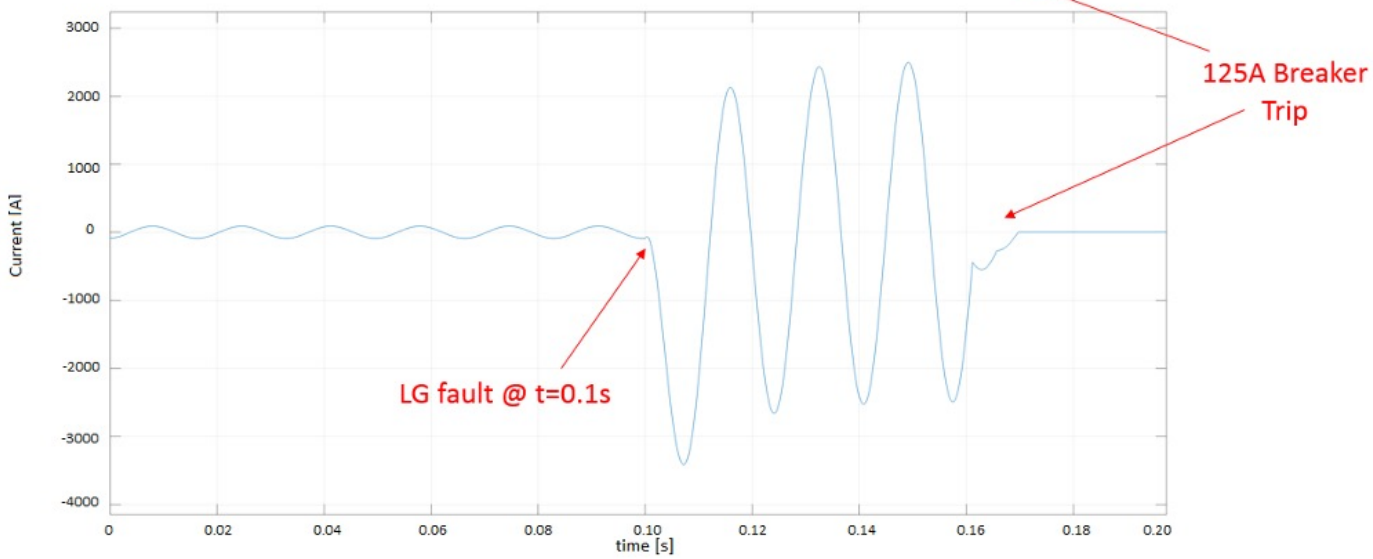

Internal DC charger breaker TRIP for feeder LG fault

WHAT CAN BE DONE TO PREVENT THE POSSIBILITY OF THE OCCURRENCE OF DC FAST CHARGING STATION TRIPPING FOR THE FEEDER GROUND FAULTS?

	Solution
#1	Install Δ-Yg Point of Interconnection (POI) transformer (instead of Yg-Yg)
#2	Float the neutral of Yg-Yg POI transformer
#3	Install Δ-Yg low-frequency transformer on customer (480V) side
#4	Install Yg-Y low-frequency transformer within EVSE
#5	Install Y-Δ low-frequency transformer within EVSE

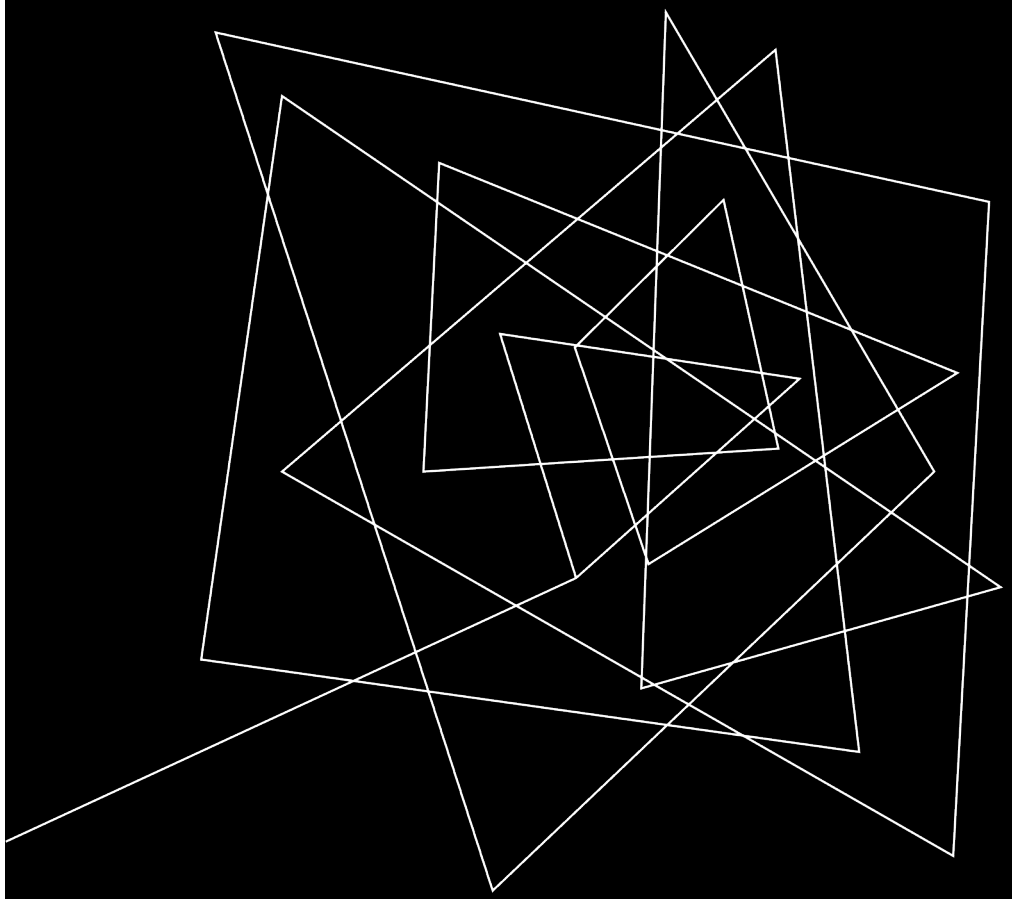

SOLUTION #1:

INSTALL Δ-Y_G POINT OF INTERCONNECTION (POI) TRANSFORMER (INSTEAD OF Y_G-Y_G)

SOLUTION #1

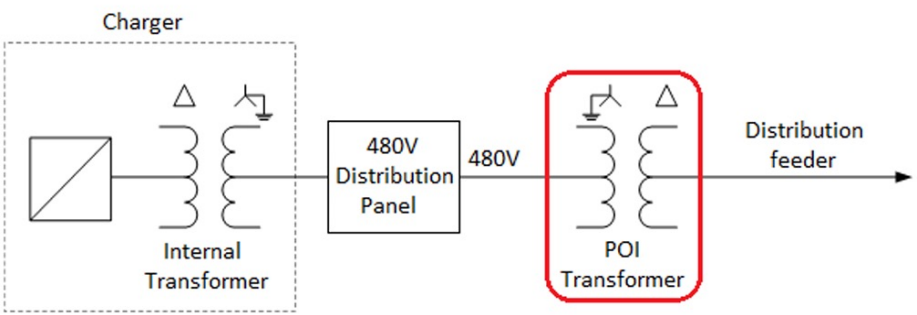

Advantages

- Blocking of zero-sequence path
- No ground current contribution for feeder faults by the chargers
- No desensitization of ground protection at the substation recloser.

Disadvantages

- Causes increase in ground fault current on customer side
- Blown single-phase fuses induces large ground currents in charger's internal Y_G transformer
- Low-side ground fault (51TN) would be required to protect the secondary winding
- Ground current division between the EVSE transformer and POI transformer for ground faults
- Increased fault duty & Arc-Flash hazard exposure for single-phase faults
- Increased through-fault stress
- Ferro-resonance concerns depending on underground (UG) cable/capacitance (such as upstream capacitor banks) of circuit during single-phase switching of recloser
- Internal faults within the winding will cause two fuses to operate. This causes extreme over-voltages on the customer equipment connected to the LS bus

SOLUTION #1

Main concern #1: POI Transformer Faults

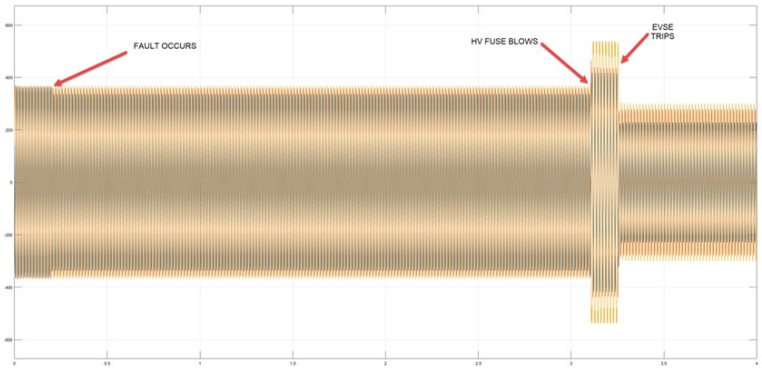

Internal POI Transformer Failure
(Fault in HV winding)

Main concern #2: Open conductor faults

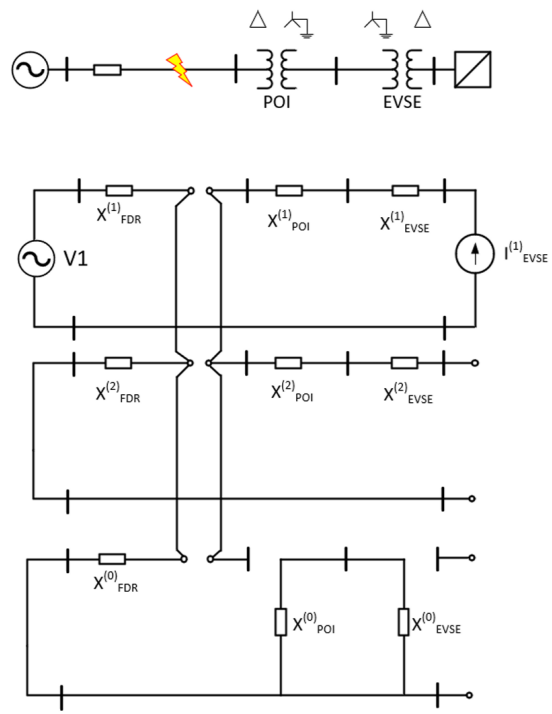

Single Phase Open Conductor Fault at HV Winding(Delta-Y_G POI)

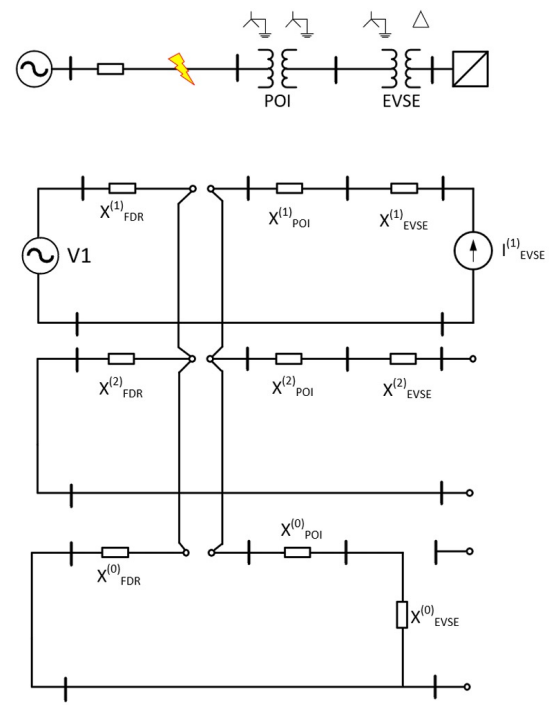

Single Phase Open Conductor Fault at HV Winding(Y_G-Y_G POI)

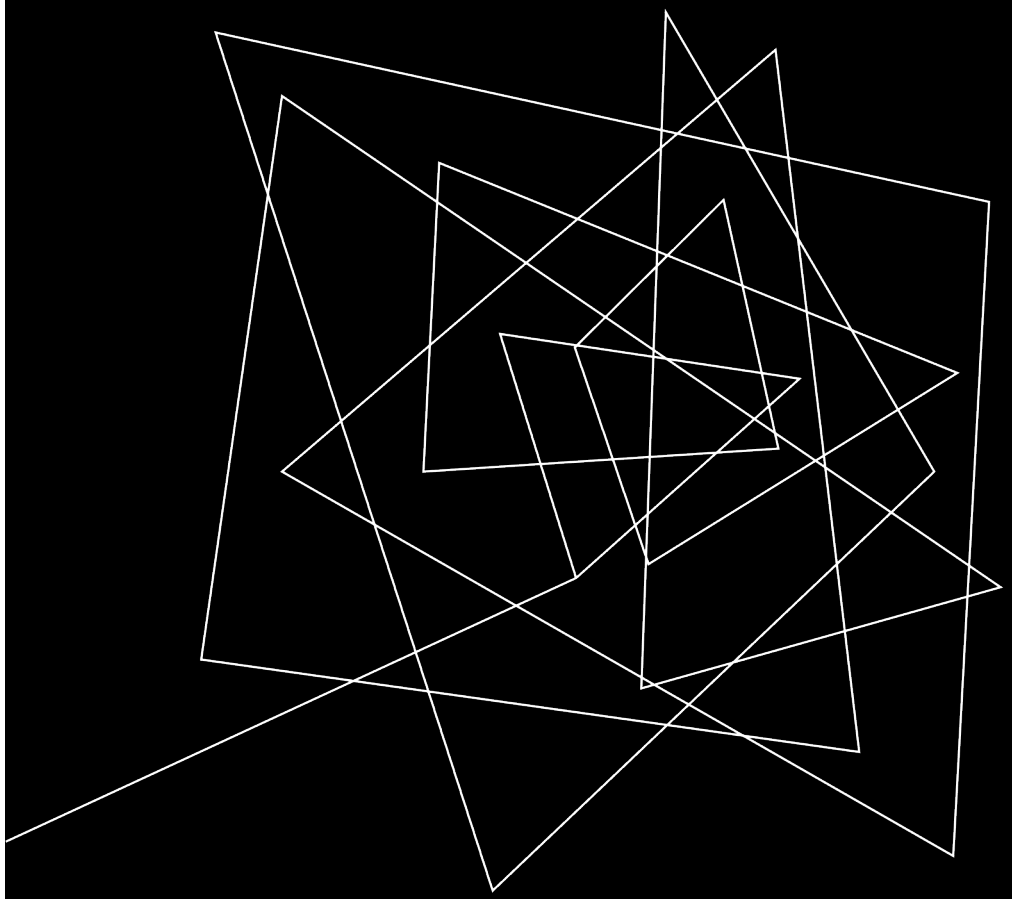

SOLUTION #2:

FLOAT THE NEUTRAL OF Y_G-Y_G POI TRANSFORMER

SOLUTION #2

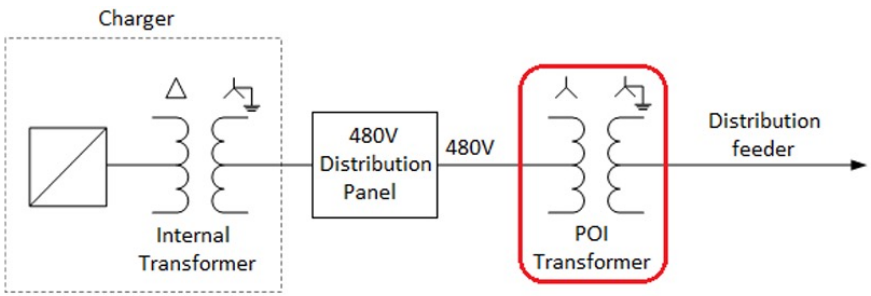

Advantages

- Blocking of zero-sequence path
- No ground current contribution for feeder faults by the chargers
- No desensitization of ground protection at the substation recloser.

Disadvantages

- Loss of effective ground on the secondary for customer loads
- Ground fault current will be directly dependent on the internal Yg-Delta charger transformer. Simultaneous tripping of the 125A breaker will cause loss of effective ground on the 480V network. This inherently causes a race condition between the POI transformer fusing and EVSE charger 125A breaker. In the event that the 125A breaker operates before the HV fusing, this will cause a loss of effective ground(this case is presented later).
- Potential for LS arrestor failure, overvoltages and severe voltage imbalance when the are chargers offline(or during ground fault 125A CB tripping)

SOLUTION #2

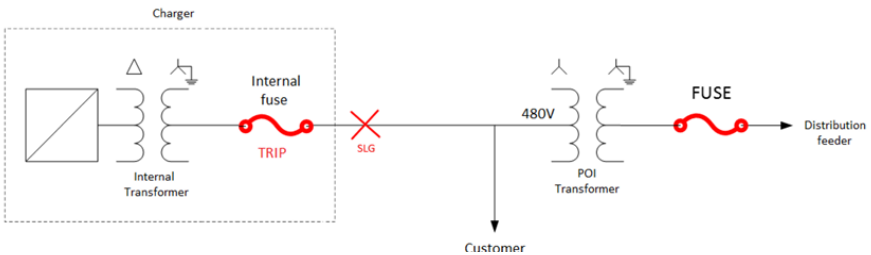

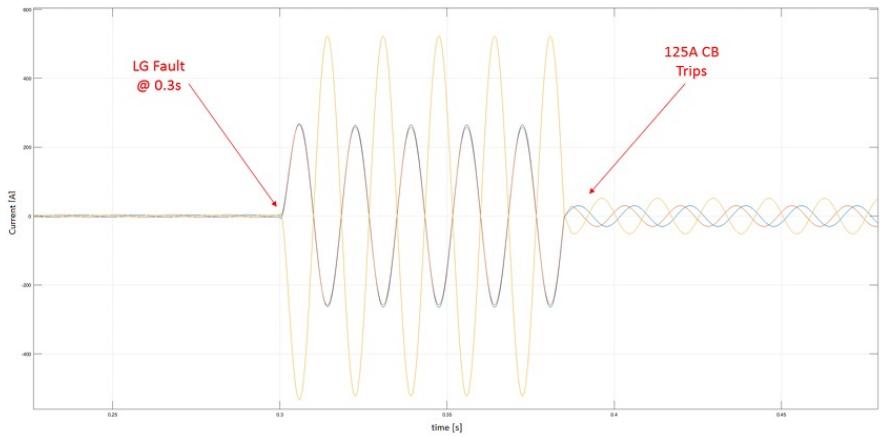

125A circuit breaker trips for 480V line-to-ground fault

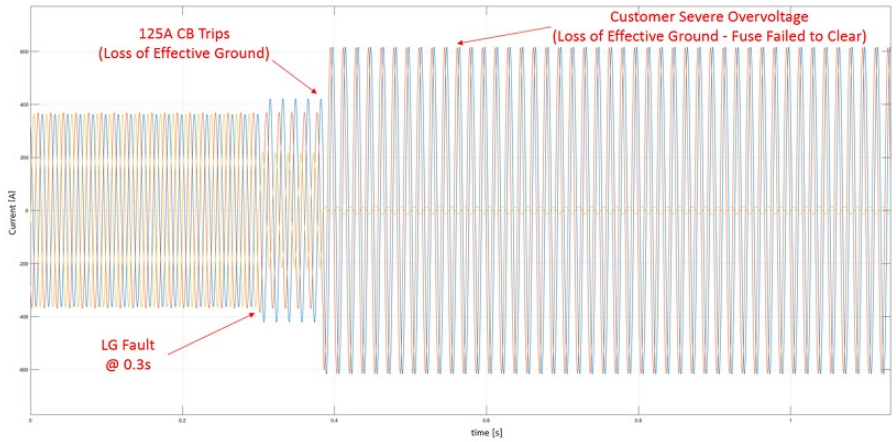

Charger overvoltage after 125A circuit breaker trip for 480V line-to-ground fault

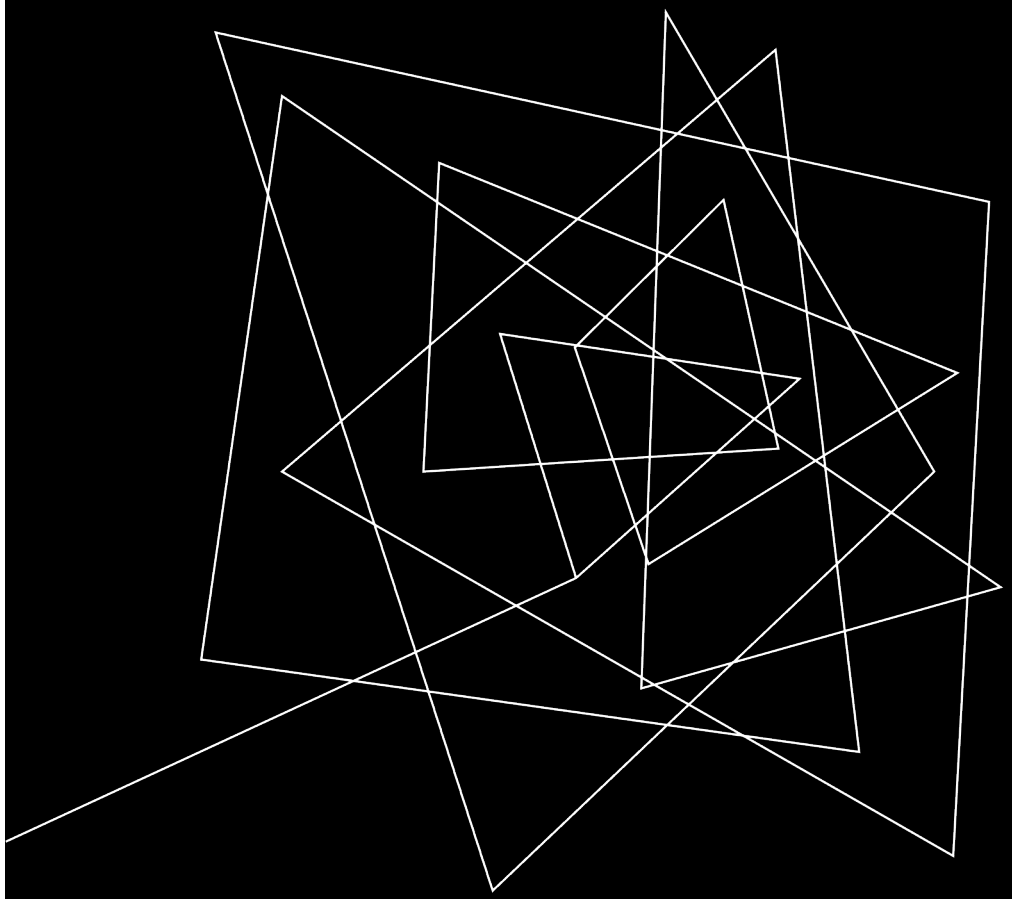

SOLUTION #3:

INSTALL Δ-Y_G LOW-FREQUENCY TRANSFORMER ON CUSTOMER (480V) SIDE

SOLUTION #3

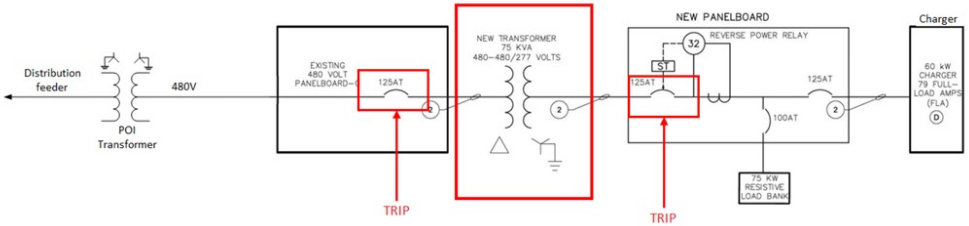

Advantages

- Blocking of zero-sequence path
- No ground current contribution for feeder faults by the chargers
- No desensitization of ground protection at the substation recloser.

Disadvantages

- Increased complexity of protection of low-frequency transformer (detailed PC Study would be required)
- Ground fault current division between charger and low frequency transformer
- Challenges with fault location
- Increased GF duty for ground faults between charger and low-frequency transformer
- Inability distinguish a ground fault between the isolation transformer/EVSE and a faulty charger. Loss of the ability to fault locate could be a safety concern

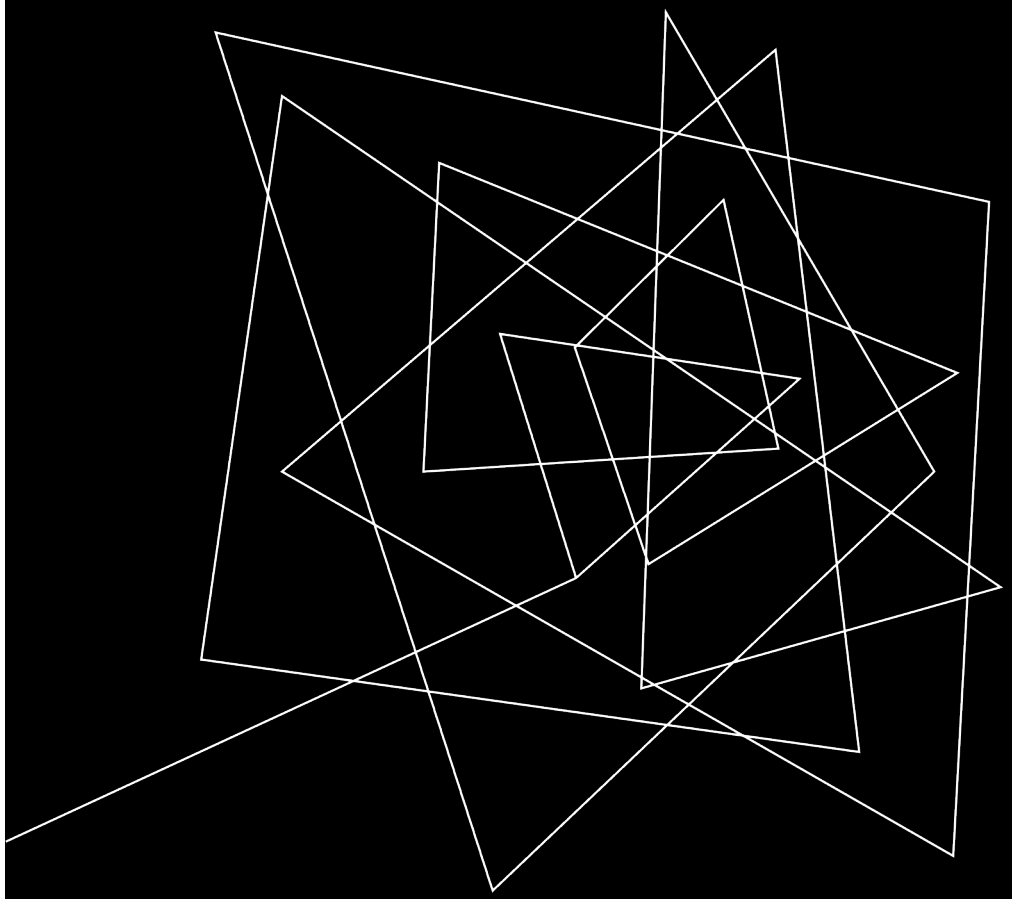

SOLUTION #4:

INSTALL Y_G-Y LOW-FREQUENCY TRANSFORMER WITHIN EVSE

SOLUTION #4

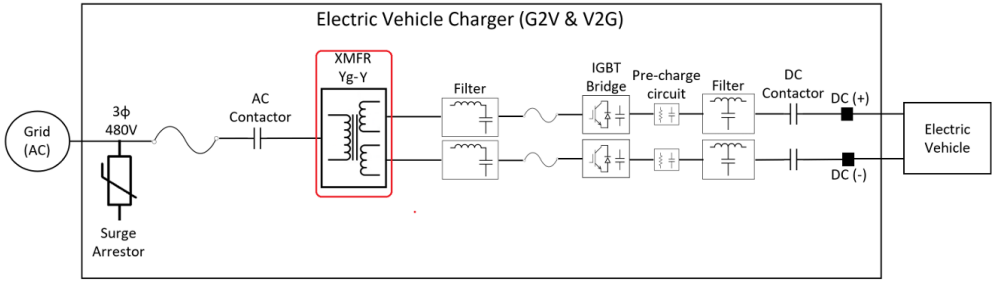

Advantages

- Blocking of zero-sequence path
- No ground current contribution for feeder faults by the chargers
- No desensitization of ground protection at the substation recloser
- most optimal solution from the protection standpoint, because it resolves most of the challenges:
  - ➢ upstream relay will still measure full ground fault current
  - ➢ 480V breakers in the distribution panel feeding the EVSE would not trip for the feeder ground fault

Disadvantages

- solution would need to be implemented by the EVSE vendor
- it would most likely require UL 1741 re-certification
- might require additional re-certifications
- would require financial investment by the vendor

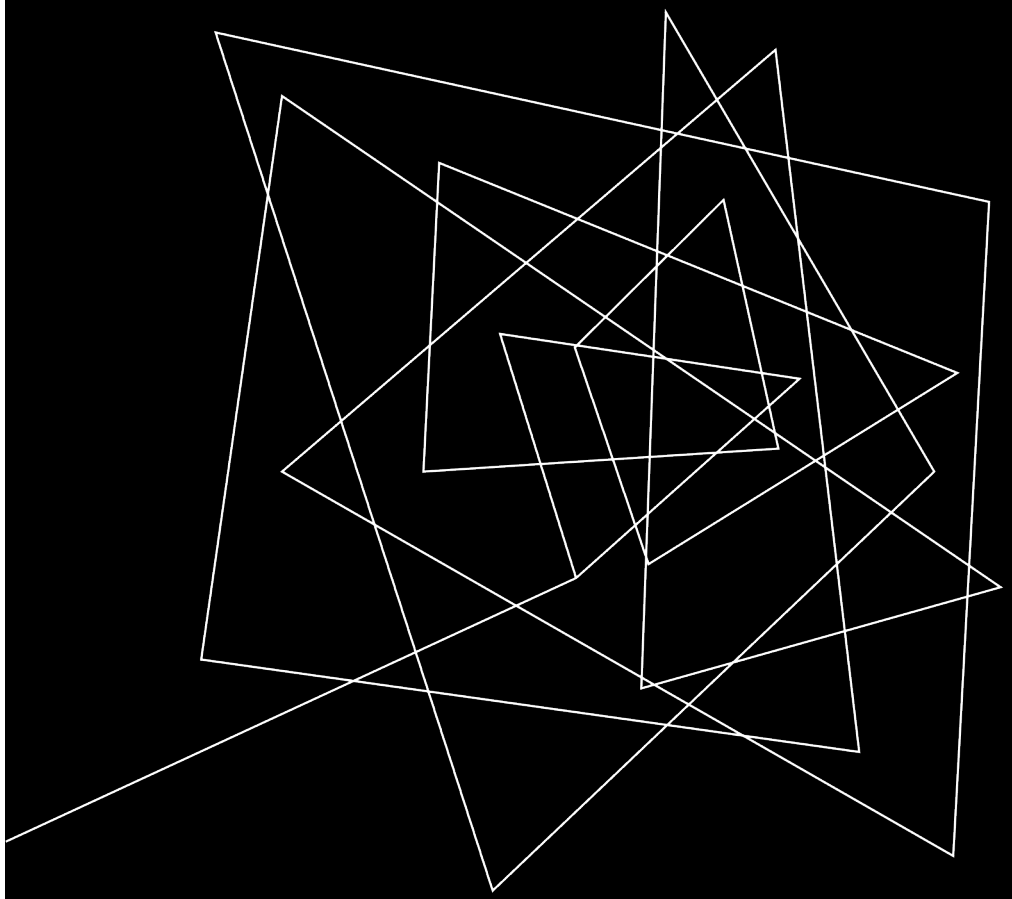

SOLUTION #5:

INSTALL Y-Δ LOW-FREQUENCY TRANSFORMER WITHIN EVSE

SOLUTION #5

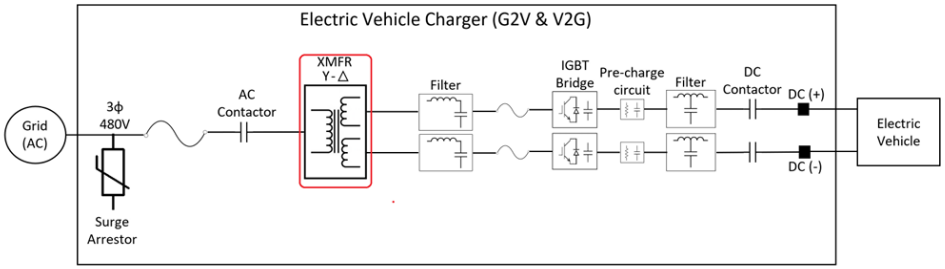

Advantages

- Open circuit for zero-sequence path
- No ground current contribution for feeder faults by the chargers
- No desensitization of ground protection at the substation recloser
- resolves most of the protection challenges:
  - ➢ upstream relay will still measure full ground fault current
  - ➢ 480V breakers in the distribution panel feeding the EVSE would not trip for the feeder ground fault

Disadvantages

- solution would need to be implemented by the EVSE vendor
- it would most likely require UL 1741 re-certification
- might require additional re-certifications
- would require financial investment by the vendor

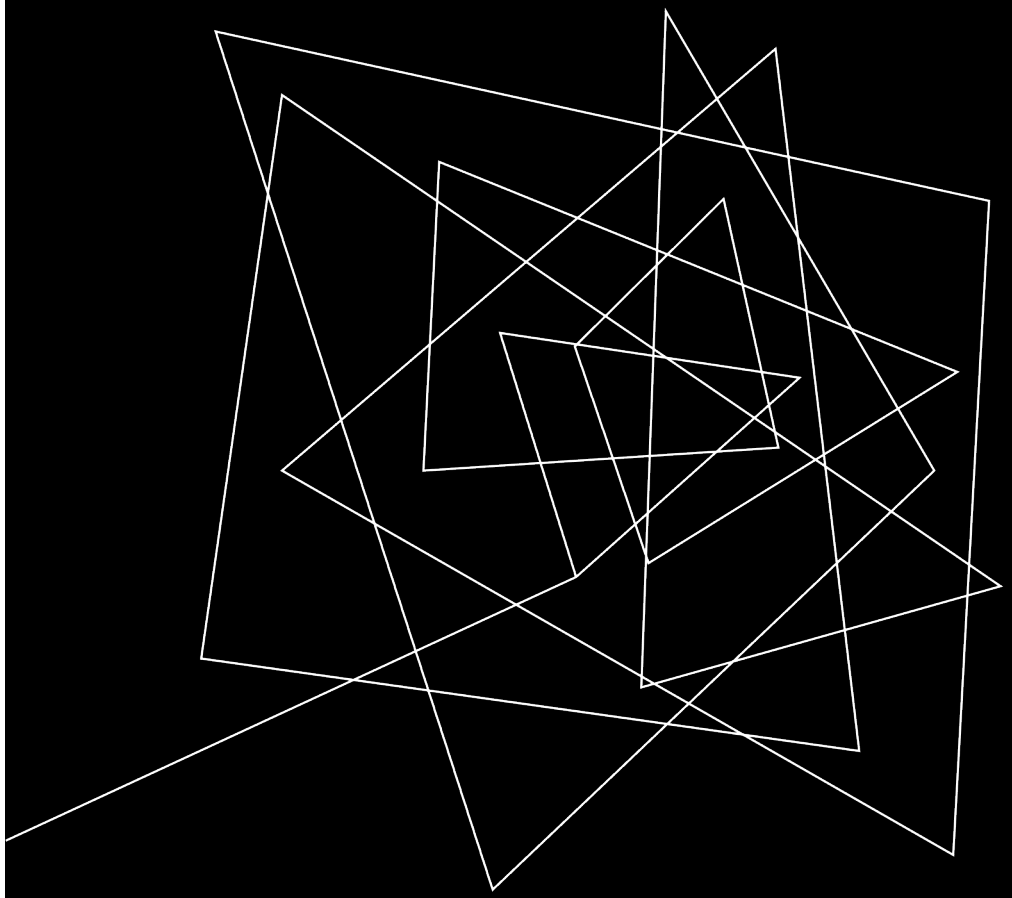

CAN WE SHOW SOME LOVE FOR POWER QUALITY (PQ) ENGINEERS

ADDITIONAL CONSIDERATIONS WHEN INSTALLING THE FAST-CHARGING STATION

- Harmonic emission from DC fast charging

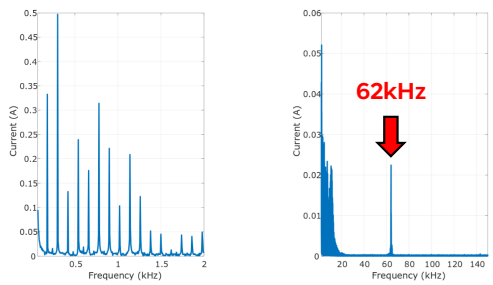

Tesla Model 3

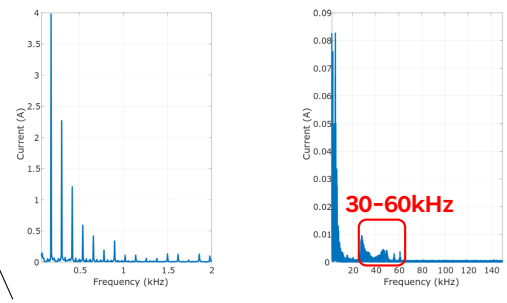

Chevy Bolt

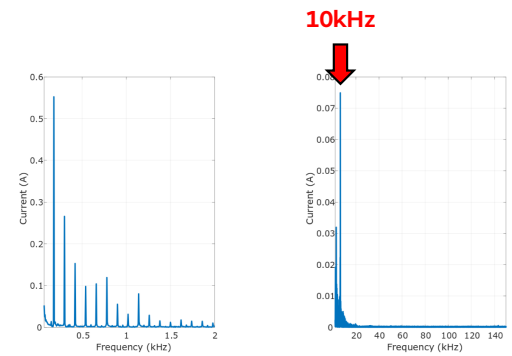

Nissan Leaf

- DC fast charger type: diode front-end vs. pulse width modulation rectifier front-end
  - ➢ Diode-front end:
    - transformer effectively dampens the supraharmonics current;
    - Harmonics emission from DC chargers aggregates approximately algebraically up to the 5th harmonic; beyond 5th, cancellation effect starts to increase
    - As a result, there is a maximum number of chargers that can be connected

Source: EPRI PQ TechWatch Report

ADDITIONAL CONSIDERATIONS WHEN INSTALLING THE FAST-CHARGING STATION

- Pulse Width Modulation Rectifier Front-End DC Charger:
  - Switching frequency – must be known and compared to the frequency resonance points from the POI transformer
  - If two are close to each other, harmonic instability or a resonance condition could occur (current waveform would typically show spiking and/or distortion)
  - Supraharmonics spectrum – could potentially result in components at Nyquist frequency (2x switching frequency of PWM) – potential system instability
  - Frequencies near transformer resonant point can be transferred through the transformer and lead to EMI issues

ADDITIONAL CONSIDERATIONS WHEN INSTALLING THE FAST-CHARGING STATION

- Short-circuit ratio (SCR)

$$SCR = \frac{Maximum\ short\ circuit\ current\ at\ PCC}{Maximum\ demand\ load\ current\ at\ PCC}$$

IEEE 519-2022

- POI Transformer frequency response

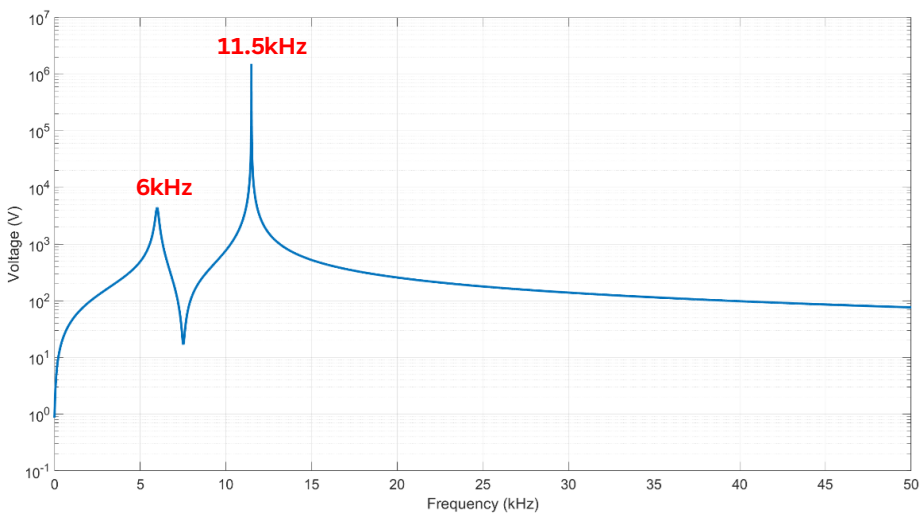

Built-in resonance points: 6kHz & 11.5kHz

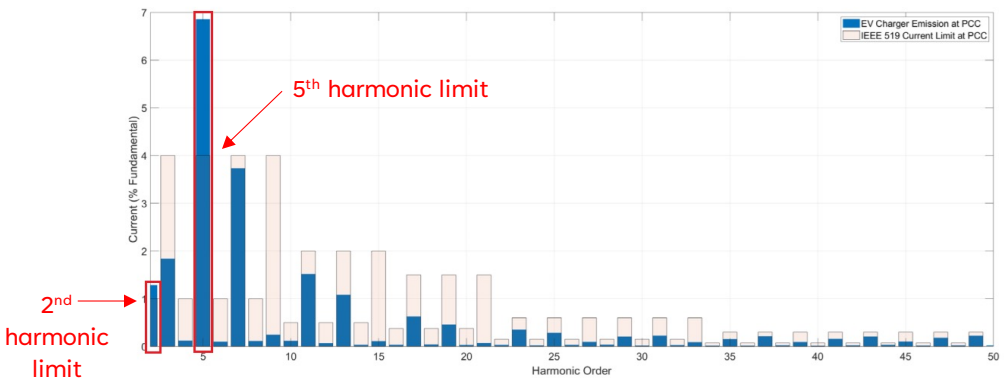

Conclusion: there is a max number of chargers that can be connected

Source: EPRI PQ TechWatch Report

ADDITIONAL CONSIDERATIONS WHEN INSTALLING THE FAST-CHARGING STATION

- Power Quality (PQ) meter
  - Most of SiC-based power electronic switching circuits have much higher switching frequencies (compared to Si-based ones)
  - IEEE 519 Std. currently goes through the 50th harmonic, but some PQ meters include higher order harmonics (many can go up to 128th and higher)
  - PQ meters that can capture the higher order harmonics (3-150kHz range) - the issue is how does one display them in useful meaningful ways
  - IEC is still working on methods of how to quantify these values and some of the methods can be very complex.
- Frequency response of voltage/current sensors associated with PQ meter
  - Most of the medium voltage sensors are not accurate for measurement of harmonics above 50th
  - Most manufacturers have very little data on the frequency response characteristics of their instrument transformers above the fundamental frequency

ADDITIONAL CONSIDERATIONS WHEN INSTALLING THE FAST-CHARGING STATION

- Frequency response of voltage/current sensors associated with PQ meter
  - There is a sensor group in IEEE working on inclusion of testing methods into these devices as the need for the information has become more widely requested.
  - Could existing sensors be used for accurate measurements in the supraharmonics range
  - Some of the PQ monitors can be used to capture data in supraharmonics range
  - New sensors

THANK YOU

Aleksandar Vukojevic, P.E., PhD

980-781-9100