Energy Trading System

Presenter: Andrew Miles

Authors: Matthew Holman, Ananth Jilliepalli, Yacine Chakhchoukh, Daniel Conte de Leon, Herbert Hess, Brian K. Johnson, Hangtian Lei

University of Idaho
College of Engineering

Project Objectives:

- Project started by a utility looking to characterize a distribution market around distribution system constraints
- Designed and implemented a Transactive Power Application (TPA) to enable and manage power trading and determine transaction feasibility:
  - Web-based transaction agreement management front end.
  - Power flow analysis that includes transaction data.
  - Supports determination of transaction feasibility.

Project Objectives:

- The Transactive Prototype Application (TPA) Energy Trading project is aimed at:
  - Enable prosumers and consumers
  - Trade power on a NEW market
  - Market controlled by utility
  - Ensure grid can support the transactions

TPA System Architecture

University of Idaho
College of Engineering

TPA Architecture Details

- Web-application (Frontend):
  - Management of transactions and needed power system data.
- Communications Manager (Backend):
  - Automatically generates OpenDSS model from transactions
- Power flow analysis:
  - Calls OpenDSS with system-generated model data and reads results.
  - MATLAB .exe for Distribution Locational Marginal Pricing

TPA Architecture Diagram

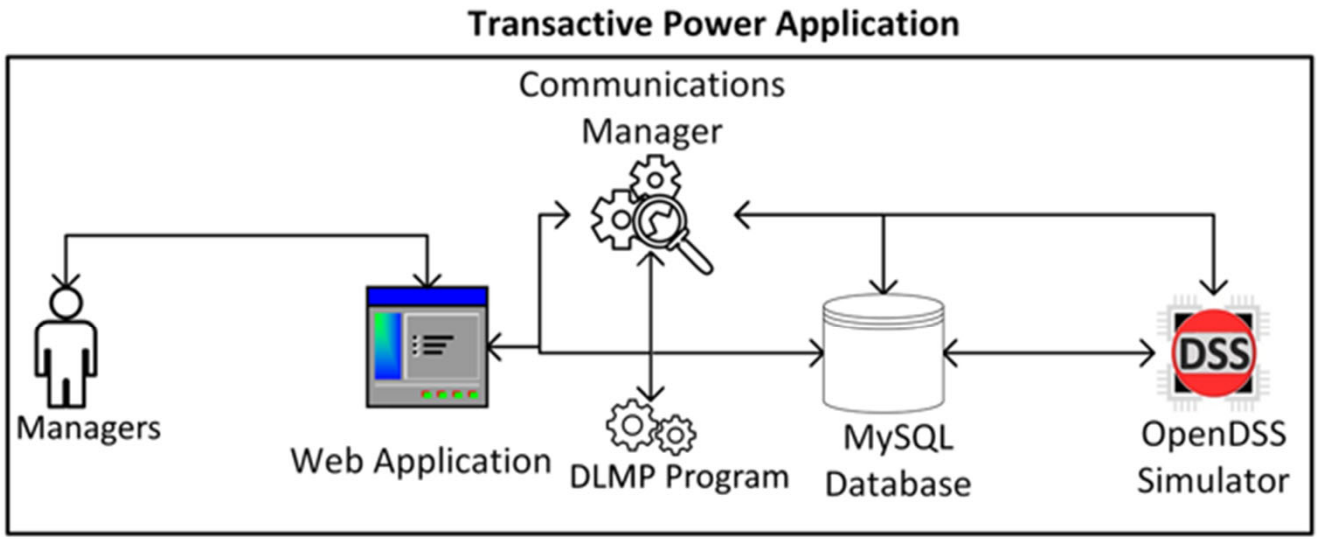

Power System Models

University of Idaho
College of Engineering

OpenDSS Model Objectives

4. Lp sdnp hqw#skrwryrowdlf#dqg#rdgv#ru#wdqvdfwlyh#nqhuj|1

5. Lqfrusrudwh#hdvwf#rdg#suriohv#ru#vrodu#jhqhudwlrq#dqg#frqvxp hu#rdgv1

6. H{sruwhvxow#wr#d#FVY#ob#wr#eh#dqdq}hg1

University of Idaho
College of Engineering

OpenDSS IEEE 13 Bus Model

- Modified IEEE 13 bus system
  - 13 buses
  - 14 Customers
  - 4 Dispatchable Generators

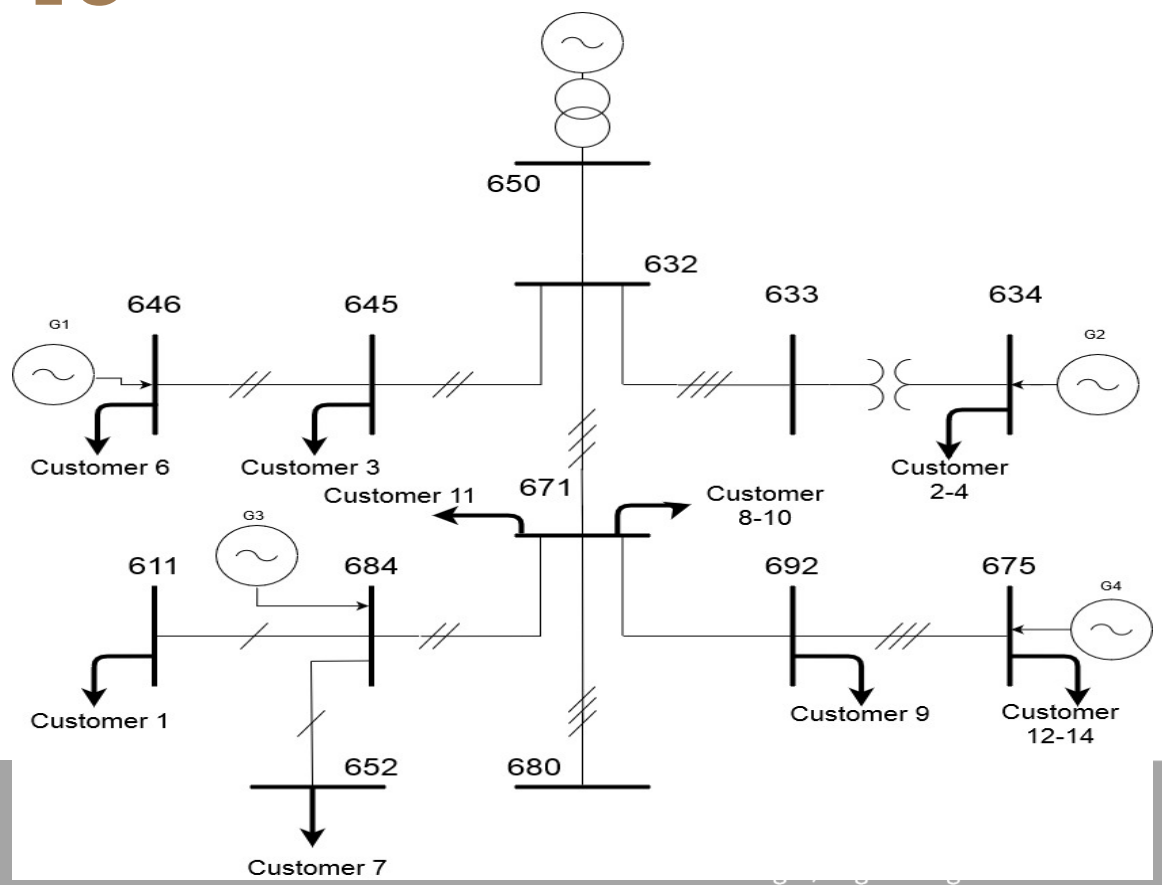

Distribution LMP

- Wkh#orfdwlrqdo#p dujlqdo#sulfh#lv#wkh#p dujlqdo#frvw#ri#vxssq|lqj#wkh#vxevhtxhqw#xqlw#ri#ghp dqg#dw#d#exv1#
- OP S#rulj lqdwhv#urp #wkh#hjlrqdo#p dunhw#Z klfk#wkh#xwldw|#xvhv#dw#wkh#vxevwdwlrq#hnyho#ru#GOP S#fdofxodwlrq
- Iqfhqwlyl}h#GHU#wr#edodqfh#vxssq|0ghp dqg/#vxssruw#yrowdjh/#dqg#p lqlp l}h#v|vwhp #orvvhv1

MATLAB DLMP

- Shu0Skdvh#dqg#Olqhdul}hg#ydudqw#e|#vroylqj#Frqyh{#vxe0 suredmp v#qrw#GF0RSI,1
- Vxevwdwlrq#qrgh#xvhg#dv#wolfn#exv#dqg#sulfh#qrgh#ru#GOPS
- Wuxvw0uhjlrq#xsgdwh#surfhgxuh#e|#fkhfnlqj#djdlqvw# RshqGVV srzhu#iorz#vroxwlrq#dqg#vhw#frqvwudlqw#
- Frp slbng#lqwr#vwdqgdorqh#lh{h

Web Application (Frontend)

University of Idaho
College of Engineering

WebApp: Menus

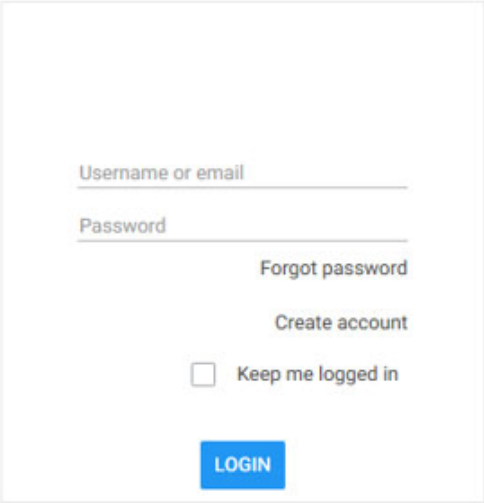

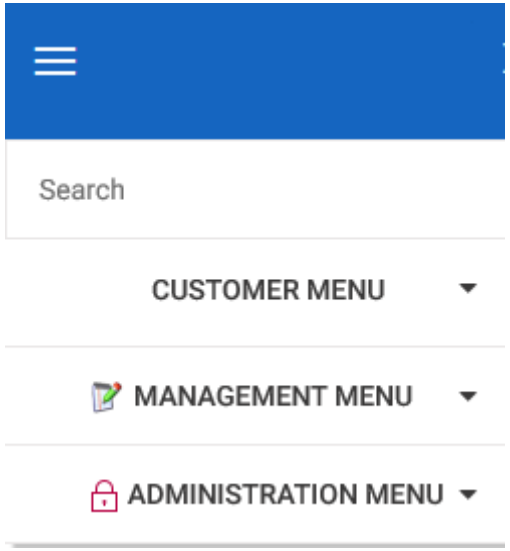

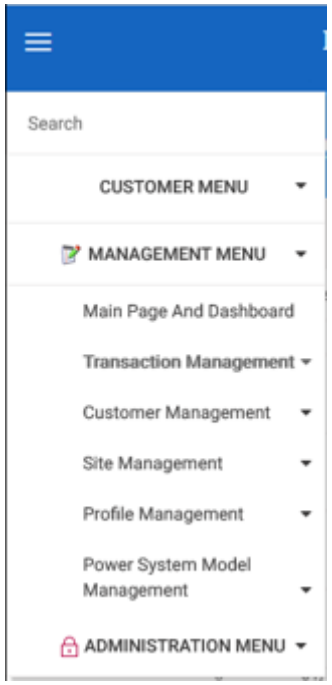

WebApp: Producer Site Management

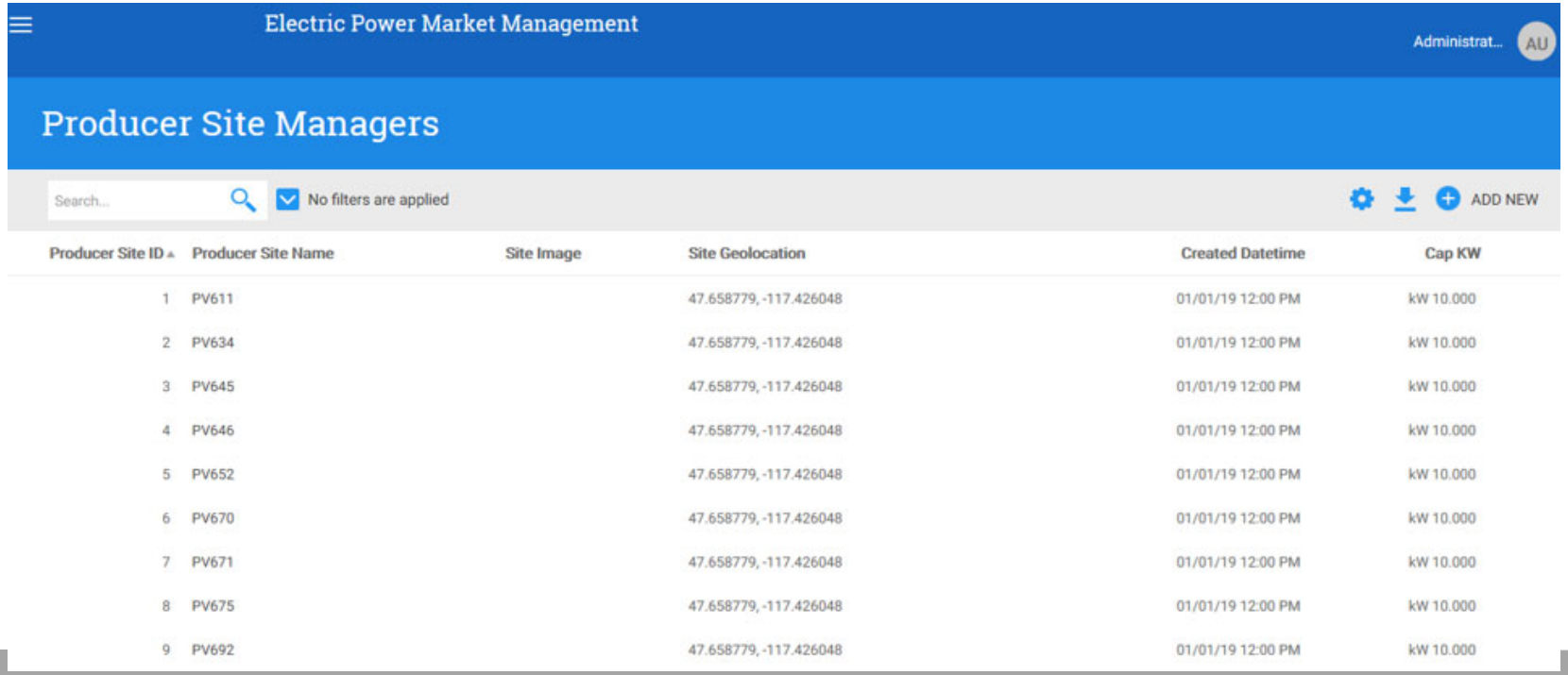

Producer Site ID	Producer Site Name	Site Image	Site Geolocation	Created Datetime	Cap KW
1	PV611		47.658779, -117.426048	01/01/19 12:00 PM	kW 10.000
2	PV634		47.658779, -117.426048	01/01/19 12:00 PM	kW 10.000
3	PV645		47.658779, -117.426048	01/01/19 12:00 PM	kW 10.000
4	PV646		47.658779, -117.426048	01/01/19 12:00 PM	kW 10.000
5	PV652		47.658779, -117.426048	01/01/19 12:00 PM	kW 10.000
6	PV670		47.658779, -117.426048	01/01/19 12:00 PM	kW 10.000
7	PV671		47.658779, -117.426048	01/01/19 12:00 PM	kW 10.000
8	PV675		47.658779, -117.426048	01/01/19 12:00 PM	kW 10.000
9	PV692		47.658779, -117.426048	01/01/19 12:00 PM	kW 10.000

WebApp: Transaction Management

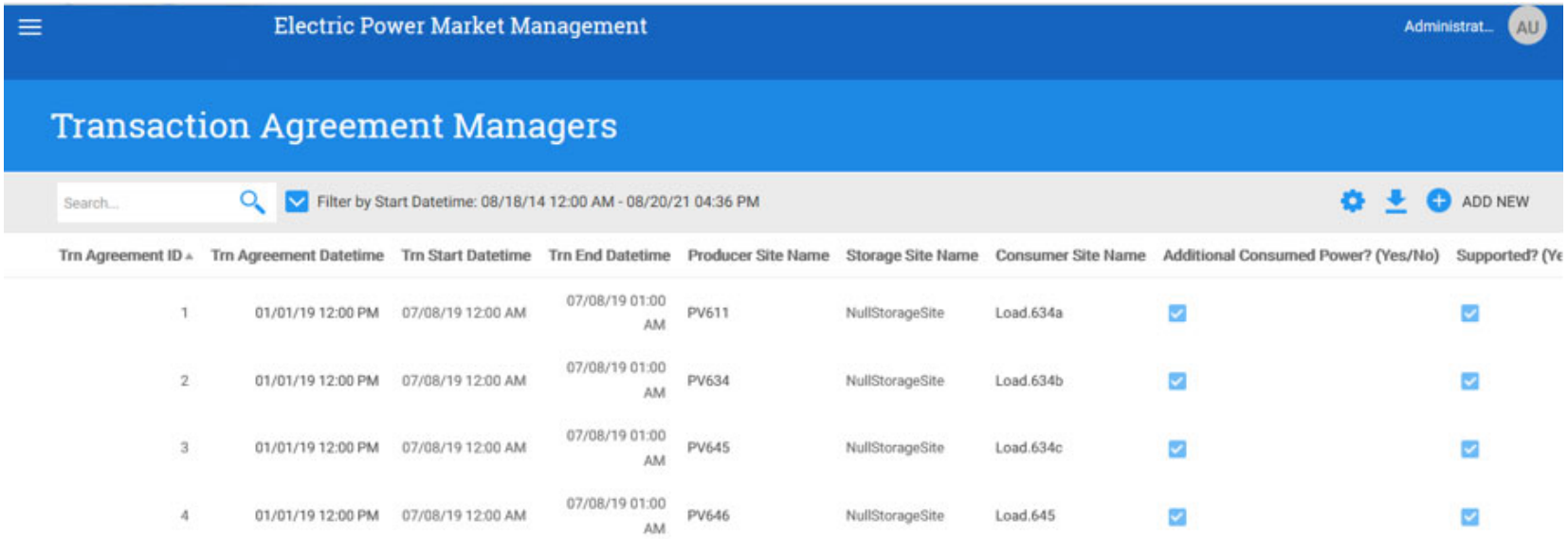

Trn Agreement ID	Trn Agreement Datetime	Trn Start Datetime	Trn End Datetime	Producer Site Name	Storage Site Name	Consumer Site Name	Additional Consumed Power? (Yes/No)	Supported? (Ye
1	01/01/19 12:00 PM	07/08/19 12:00 AM	07/08/19 01:00 AM	PV611	NullStorageSite	Load.634a	☑	☑
2	01/01/19 12:00 PM	07/08/19 12:00 AM	07/08/19 01:00 AM	PV634	NullStorageSite	Load.634b	☑	☑
3	01/01/19 12:00 PM	07/08/19 12:00 AM	07/08/19 01:00 AM	PV645	NullStorageSite	Load.634c	☑	☑
4	01/01/19 12:00 PM	07/08/19 12:00 AM	07/08/19 01:00 AM	PV646	NullStorageSite	Load.645	☑	☑

Communication Manager

University of Idaho
College of Engineering

TPA: Communication Manager Workflow

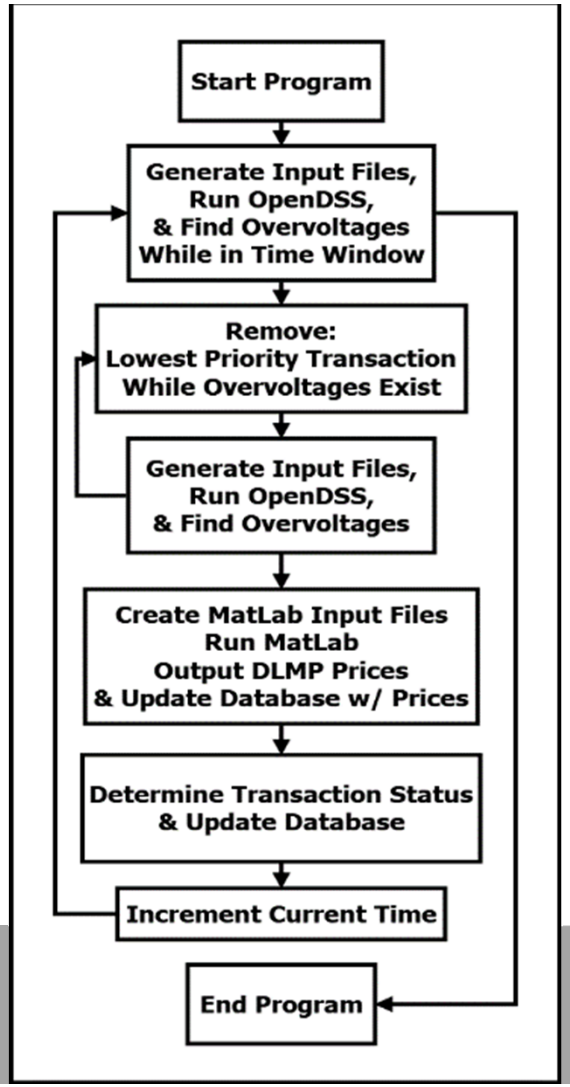

Testing The Prototype

University of Idaho
College of Engineering

Simulation Scenarios

- Wkh#v|vwhp #zdv#whvwhg#dw#yduirxv#vfhqduirv
  - Rulj lqdo#v|vwhp #rdg lqj#zlwk#3(#SY
  - Lqfoxgh#SY#xs#wr#93(
- Revhuyh#srzhu#v|vwhp #GOPSv#dqg#ehkdylru#zlwk#ghilqhg#wudqvdfwlrqv#ehwzhhq#fxvwrp huv
- Revhuyh#dqg#frqilup #dssdfdwlrq#frp p xqlfdwlrq#gxulqj#uxqwlp h/#dqg#yhuli|#wudqvdfwlrqv#wr#vhh#li#dq|#zhuh#hp ryhg

Original Power Dispatch

Generator	kW	kVAR
632.A	231.61	3.621
632.B	210.55	167.86
632.C	270.67	134.04
634.A	50	0
634.B	50	0
634.C	50	0
675.A	250	0
675.B	250	0
675.C	250	0

Customer	kW	kVAR
C1	170	20
C2	160	115
C3	120	109
C4	120	240
C5	170	125
C6	0	0
C7	128	68
C8	8.5	5
C9	33	19
C10	58.5	34
C11	0	0
C12	485	-10
C13	68	-140
C14	290	12

Original Real Power DLMPS

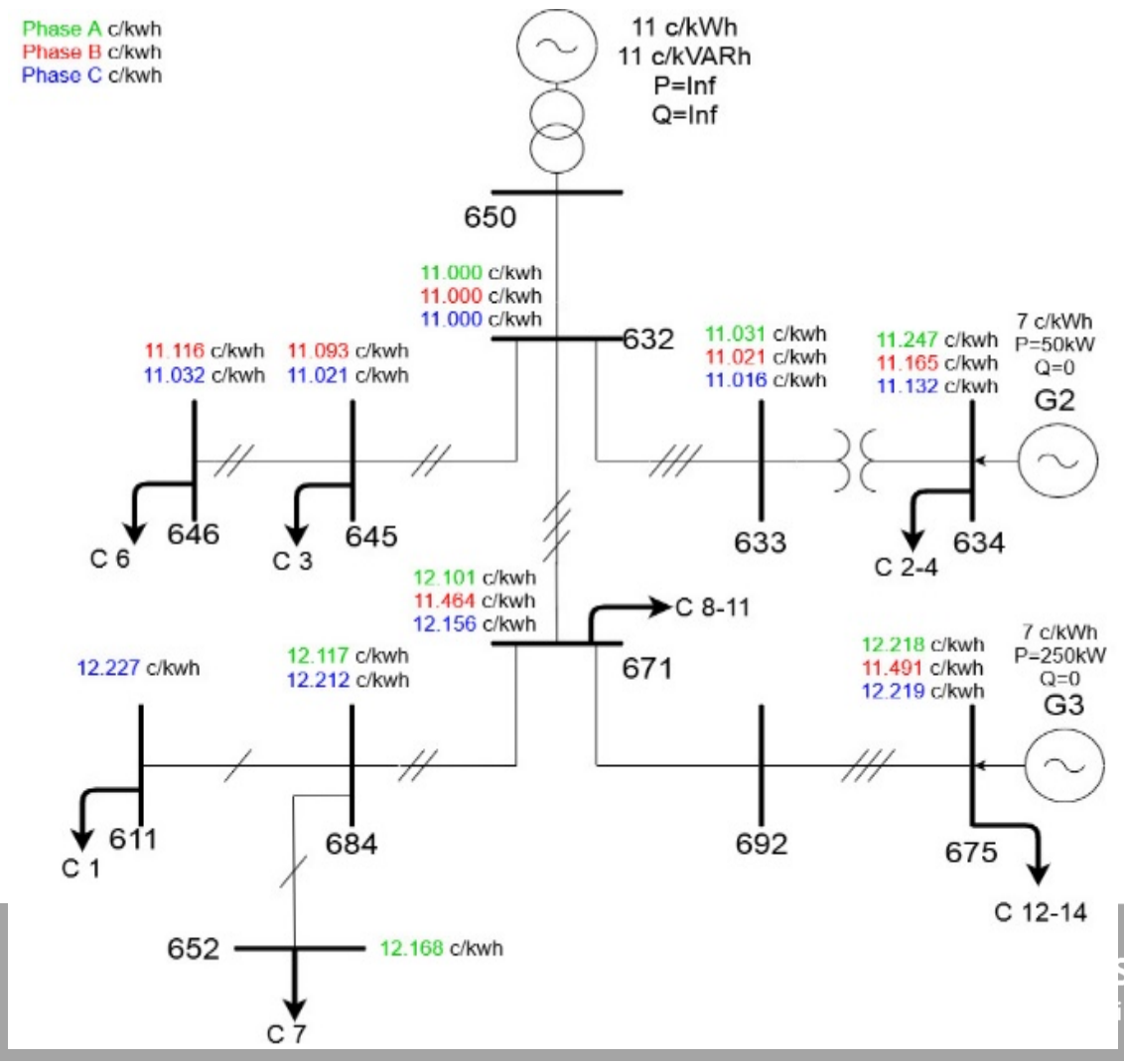

Original Reactive Power DLMPS

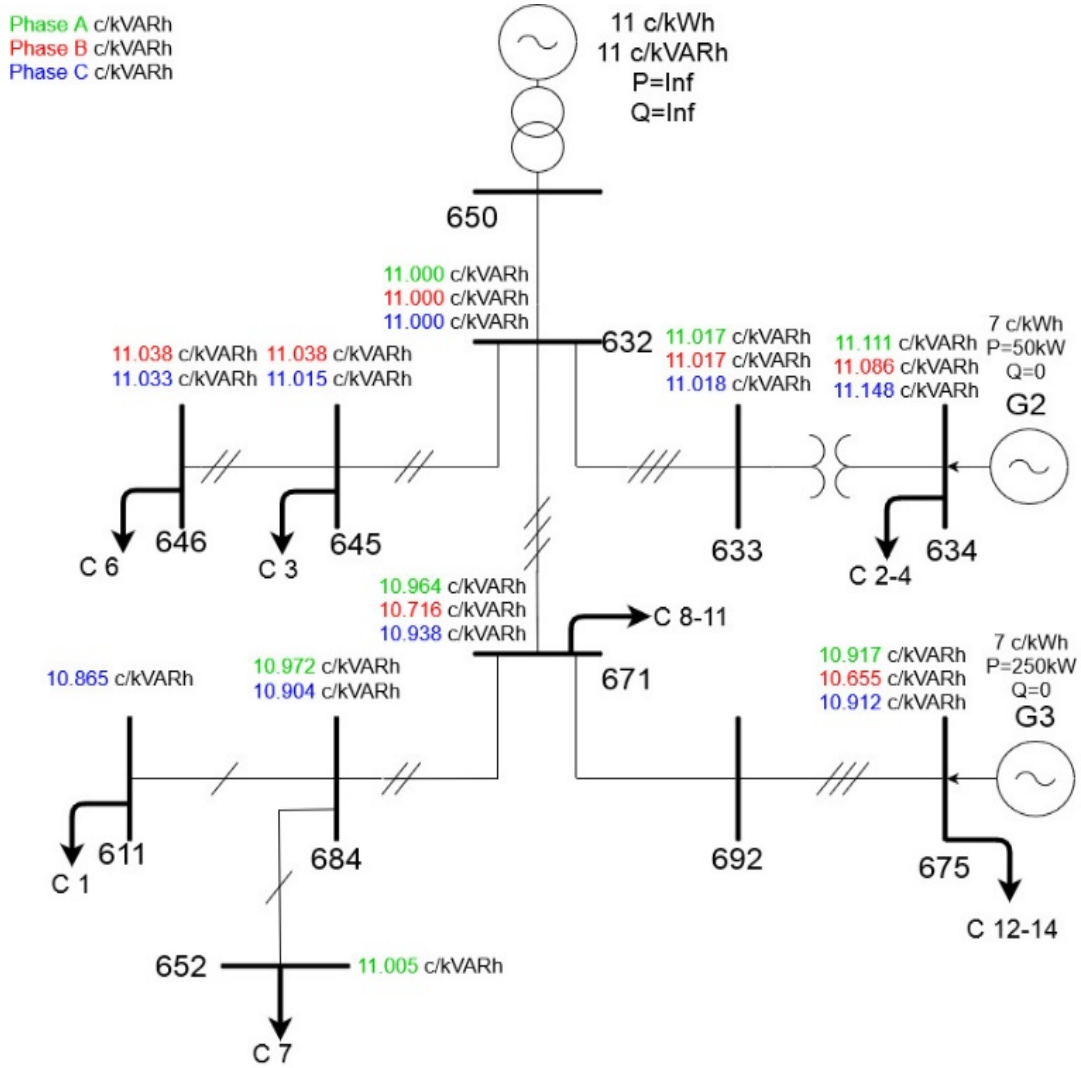

rsity of Idaho
ngineering

Power Dispatch with PV Integration

Generator	kW	kVAR
632.A	0	46.758
632.B	78.487	182.46
632.C	225.17	160.78
634.A	28.441	0
634.B	50	0
634.C	50	0
675.A	250	0
675.B	250	0
675.C	250	0

Customer	kW	kVAR
C1	68	20
C2	64	115
C3	48	109
C4	48	240
C5	68	125
C6	0	0
C7	51.2	86
C8	8.5	5
C9	33	19
C10	58.5	34
C11	0	0
C12	485	-10
C13	68	-140
C14	290	12

Real Power DLMPS PV

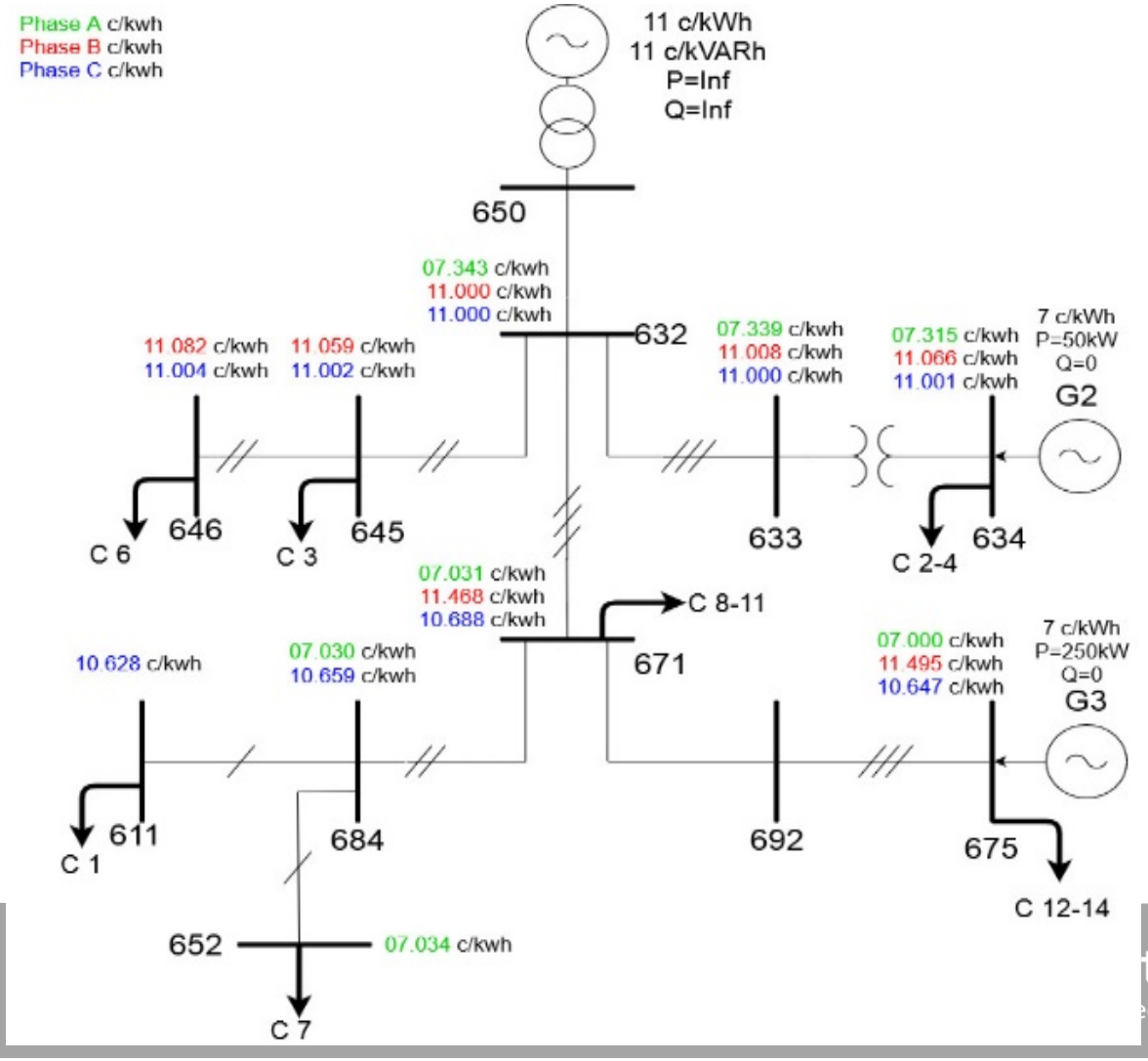

Reactive Power DLMPS PV

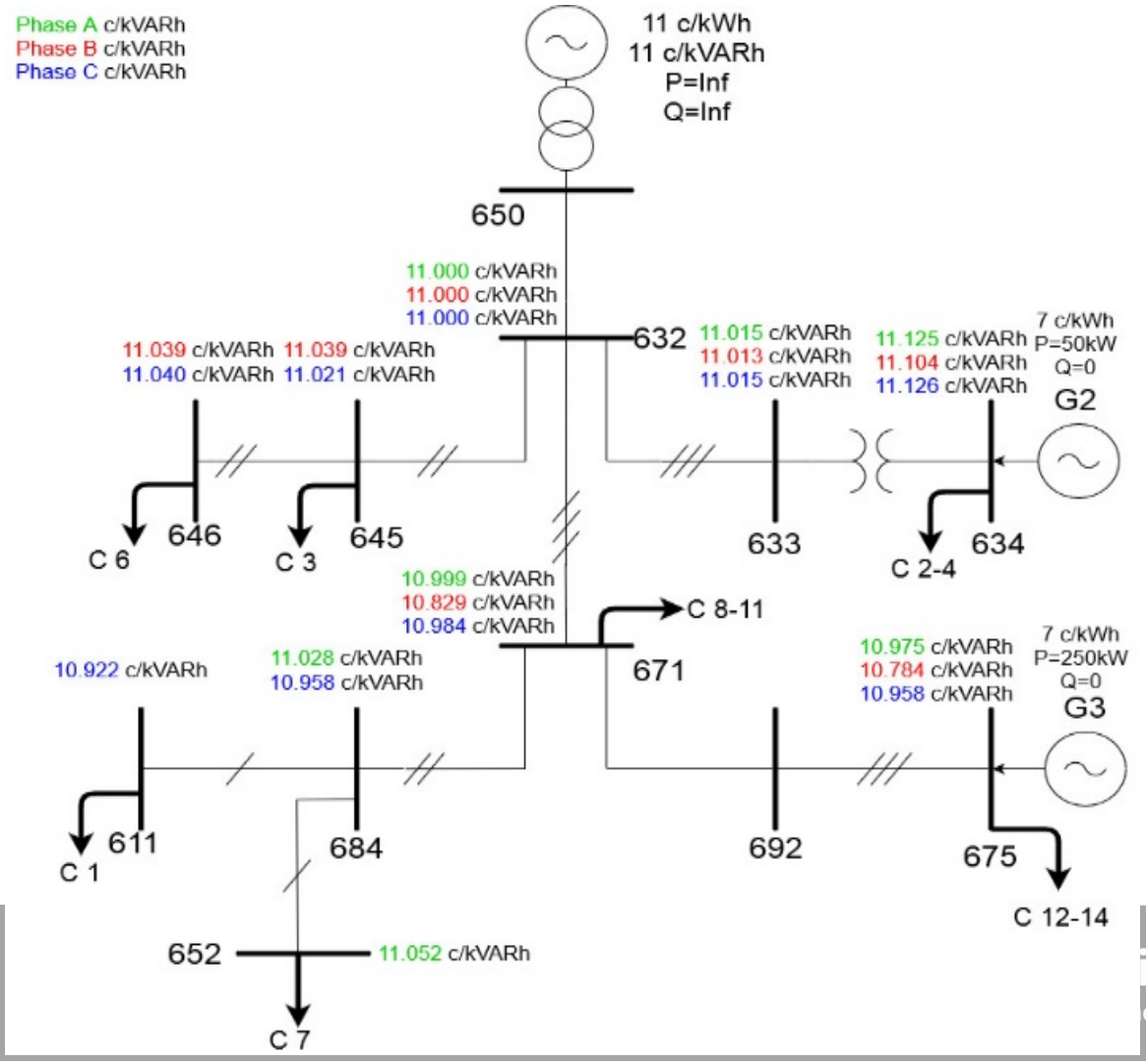

Conclusions

- WSD#dssdfdwlrq#vlp xodwhg#iru#p xow0krxu#vfhqdulrv#z lwk# ghilqhg#wdqvdfwlrqv
- Uhgxfhv#sulfh#rq#ihhghu#dqg#hqfrxudjhv#hqhuj|#wdglqj
- Dvvlvw#q#srz hu#v|vwhp #dp lw#yrodjh/#dqh#iorz ,

Next Steps

- WSD#dssdfdwlrq#vlp xodwhg#iru#
  - P xowlkrxu#vfhqdulrv#z lwk#vp du#djhqw#dqg#ghp dqg#hvsrqvh
  - Odujhu#v|vwhp
- Dqdq|vlv#ri#p sdfw#rq#srz hu#v|vwhp #htxlsp hqw#vxfk#dv# wudqvirup huv#dqg#hjxodwruv
- Ghsor|p hqw#ri#dssdfdwlrq#iru#odujhu#vfdoh#whvwlqj


QUESTIONS?
COMMENTS?
CONCERNS?

Transaction Agreement fields added after DLMP calculation:

- GOPS#sulfh#dw#wkh#fruhvsrqgqj#exv#+'2nZ k,1
- WDSulfh +'2nZ k,#wkdw#wkh#xwdw|#sursrvhv#iru#wkh# Wudqvdfwlrq#Djuhhp hqw1
- Wklv#p d|#eh#fdofxodwhg#edvhg#rq#wkh#GOPS#scxv# frvw#ri#glvwulexwlrq1

Pricing Prioritization

University of Idaho
College of Engineering

Transaction Enabled/ Disabled Logic

- Li#ryhuyrowdjhg=#
  - Wudqvdfwlrq#lv#glvdedohg
- Li#qrw#ryhuyrowdjhg dqg#sulflqj#fulwhuld#lv#p hw=
  - Wudqvdfwlrq#lv#hqdedohg
- Li#qrw#ryhuyrowdjhg dqg#sulflqj#fulwhuld#lv#qrw#p hw=
  - Wudqvdfwlrq#lv#glvdedohg

Integration of Database and OpenDSS:

- Dssdfdwlrq#lhdgv#urp #gdwdedvh#dqg#fuhdwhv# RshqGVV prghd1
- Dssdfdwlrq#fdov#RshqGVV dqg#rewdlqv#rxwsxw#lohv1
- Dssdfdwlrq#ghwhup lqhv#wdqvdfwlrq#ihdvleluw|#edvhg# rq#RshqGVV srzhu#iorz #dqdq|vlv1
- Dssdfdwlrq#zulwhv#edfn#lqwr#gdwdedvh#wdqvdfwlrq# ihdvleluw|1

Overvoltage Elimination

University of Idaho
College of Engineering

Overvoltage Prioritization: Algorithm:

- Lwhudwlyhq|=#zklch#wkhuh#lv#vwlo#R yhuyrowdjh#lq#dq|#Exv,=
  - J hqhudwh#R shqGVV p rgho#dqg#Uxq1
  - Uhdg#R shqGVV R xwsxw1
  - Li#R yhuyrowdjh#dw#d#Exv#wkhq=
    - WD#zlwk#rz hvw#sulruw|#rq#wkdw#Exv#lv#G lvdedng1

ATP: Comm. Manager Transaction Feasibility Determ.

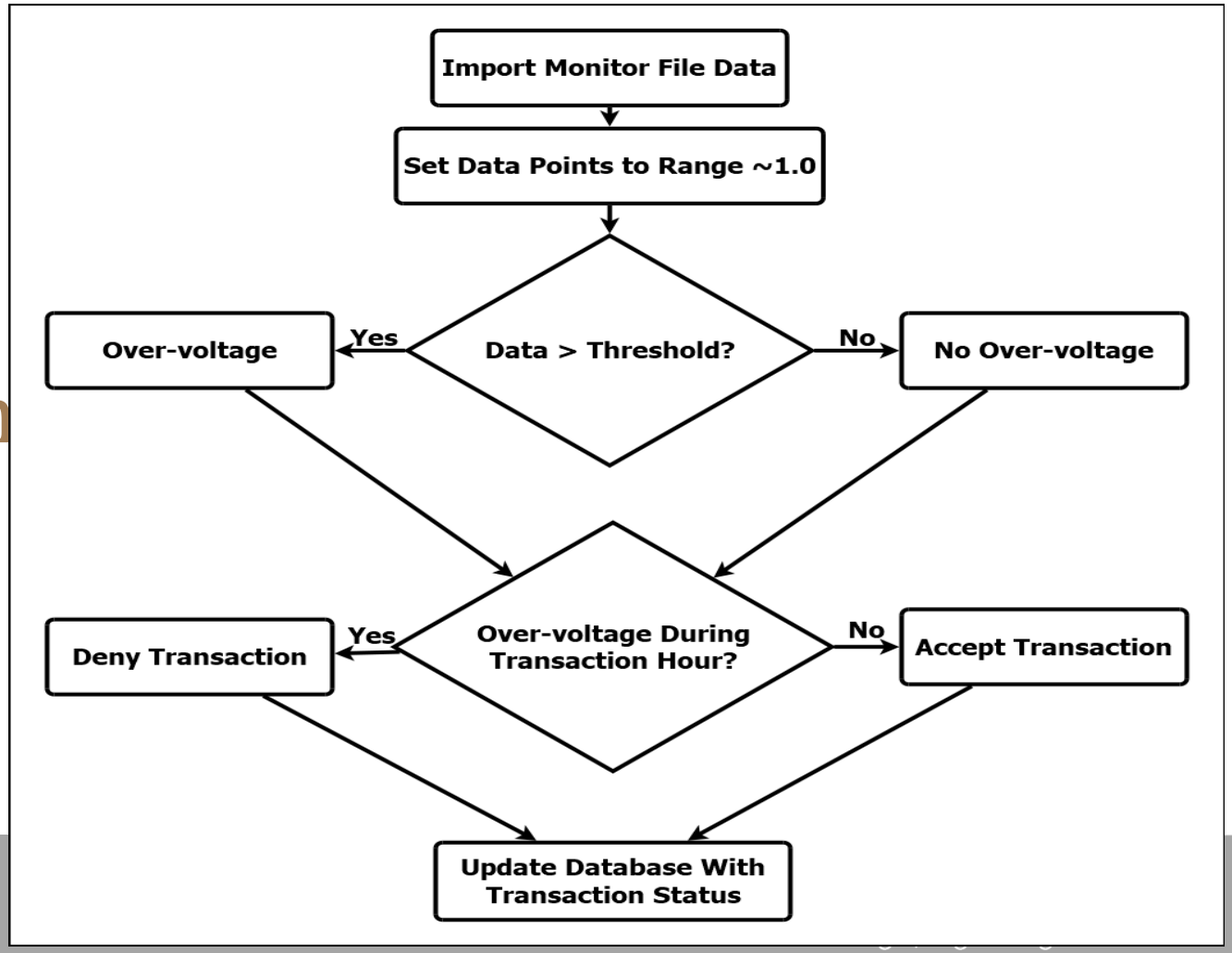

Transaction Prioritization

University of Idaho
College of Engineering

Transaction Agreement Fields+:

- Fxvwrp hu
- Surgxfhu#Vlwh
- Frqvxp hu#Vlwh
- P lqlp xp #dffhswhg#sulfh#iurp #Surgxfhu#Vlwh,1
- P d{lp xp #dffhswhg#sulfh#iurp #Frqvxp hu#Vlwh,1

Sulfh#Fulwhuld#P hwB

Overvoltage Prioritization: Info.

- Wudqvdfwlrq#Djuhhp hqw#WDv,#duh#dvvrfldwhg#wr#
  Frqvxp hu#dqg#Surgxfhu#Vlwhv1
- Vlwhv#duh#frqqhfwhg#wr#Exvhv1
- P xowlsoh#WDv#iru#rqh#Exv1
- P xowlsoh#WDv#iru#d#Surgxfhu#Vlwh#ru#Frqvxp hu#Vlwh1
- Wudqvdfwlrq#Djuhhp hqw#kdyh#Sulruw|#Srlqw1
- WDv#duh#qrz #hvwulfwhg#wr#R qh#Krxu1

Transaction Agreement Enabling Strategy: Price Criteria Met?

- Li#WDSulfh idov#ehwzhhq#P lq#dqg#P d{#htxhvwhg/# wkhq#wkh#Sulfh#Fulwhuld#lv#P hw
- Li#WDSulfh idov#rxwlgh#P lq#dqg#P d{#htxhvwhg/#wkhq# wkh#Sulfh#Fulwhuld#lv#qrw#P hw1
- Lq#ixwxuh/#Wudqvdfwlrq#Djuhhp hqw#p d|#eh#frqyhuwhg# wr#Frqwudfw#edvhg#rq#wkhvh#hvxow1