nationalgrid
HERE WITH YOU. HERE FOR YOU.

Use of Cellular Communication to Remotely Deploy Distribution Automation Functionality

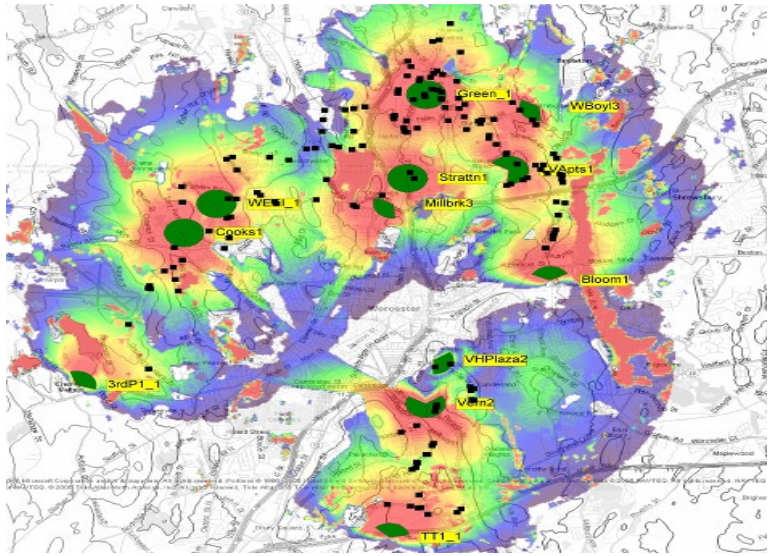

Jorge Valenzuela

Reston VA, Oct 2018

cigré

nationalgrid
HERE WITH YOU. HERE FOR YOU.

Communication Infrastructure

nationalgrid
HERE WITH YOU. HERE FOR YOU.

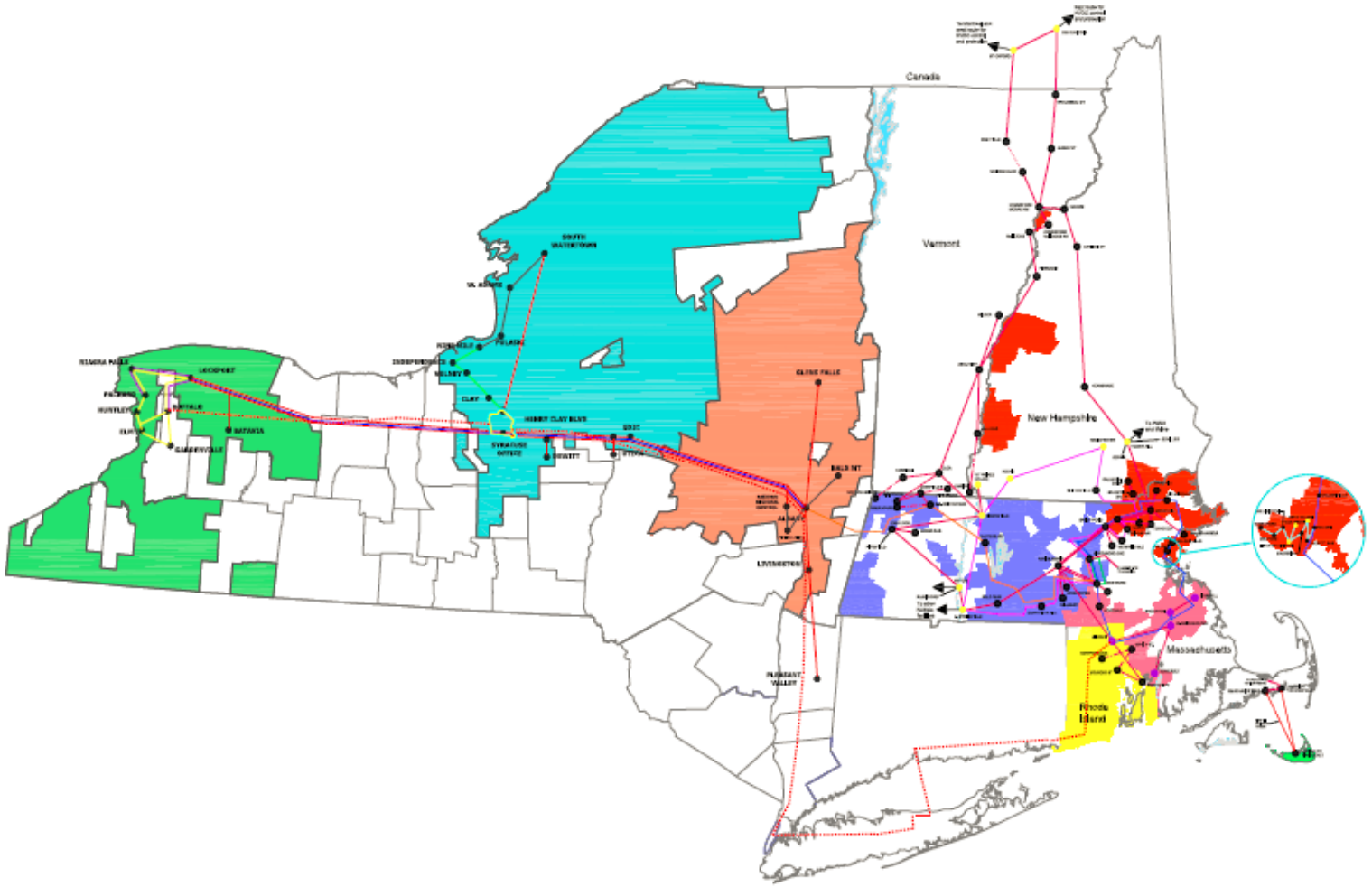

- Historically, National Grid has remotely monitored and controlled thousands of intelligent devices on its service territory (Massachusetts, New York and Rhode Island)
- Its infrastructure posses a mixture of Leased and Privately owned communication circuits covering distribution, sub-transmission, and transmission systems

Communication Infrastructure

nationalgrid
HERE WITH YOU. HERE FOR YOU.

- On the Distribution and Sub-T side, communication infrastructure development was usually done on a project to project basis.
- In general, private 900MHz Radio systems were utilized to integrate diverse distribution devices including distribution automation
- Experience gained through Smart Grid, Volt/VAR Optimization (VVO), and new technology demonstration pilots, illustrated that the future of communications technologies deployed across the system would require a flexible model.
- From a functionality perspective, a need to support various types of communications technologies was identified as application requirements started to vary greatly
- Modern network architectures for system critical operations require low-latency, a high degree of availability, reliability, serviceability, security, and redundancy with varied degrees of cost and complexity.

New flexible design

nationalgrid
HERE WITH YOU. HERE FOR YOU.

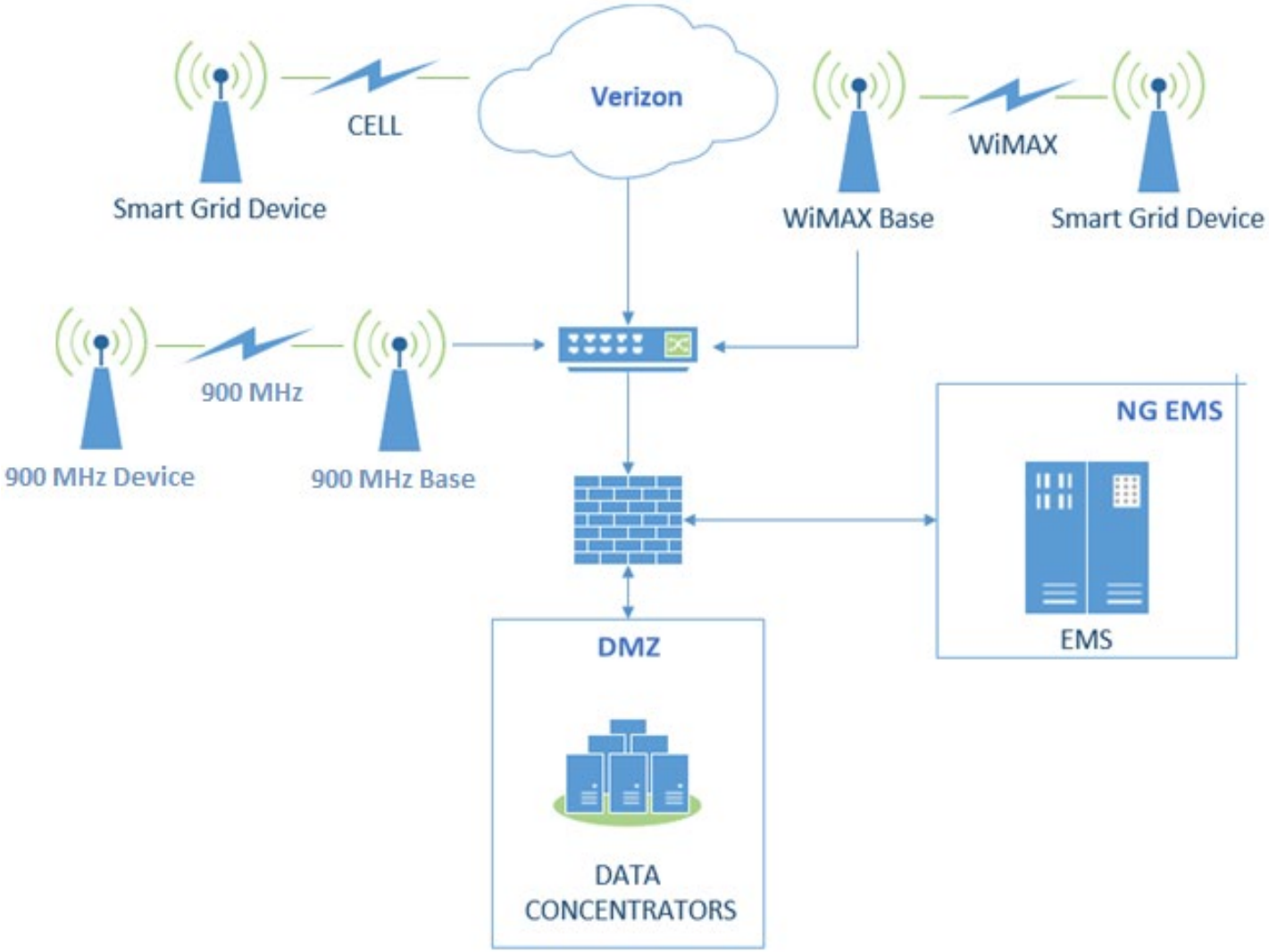

Characteristics:

- Network separated on its own DMZ
- Serves as a secure “buffer” for the data
- Allows polling of data on demand via concentrators
- Integrates diverse wireless communication technologies
- Easy to expand without disturbing the rest of the network
- Can include additional information services

Recloser integration

nationalgrid
HERE WITH YOU. HERE FOR YOU.

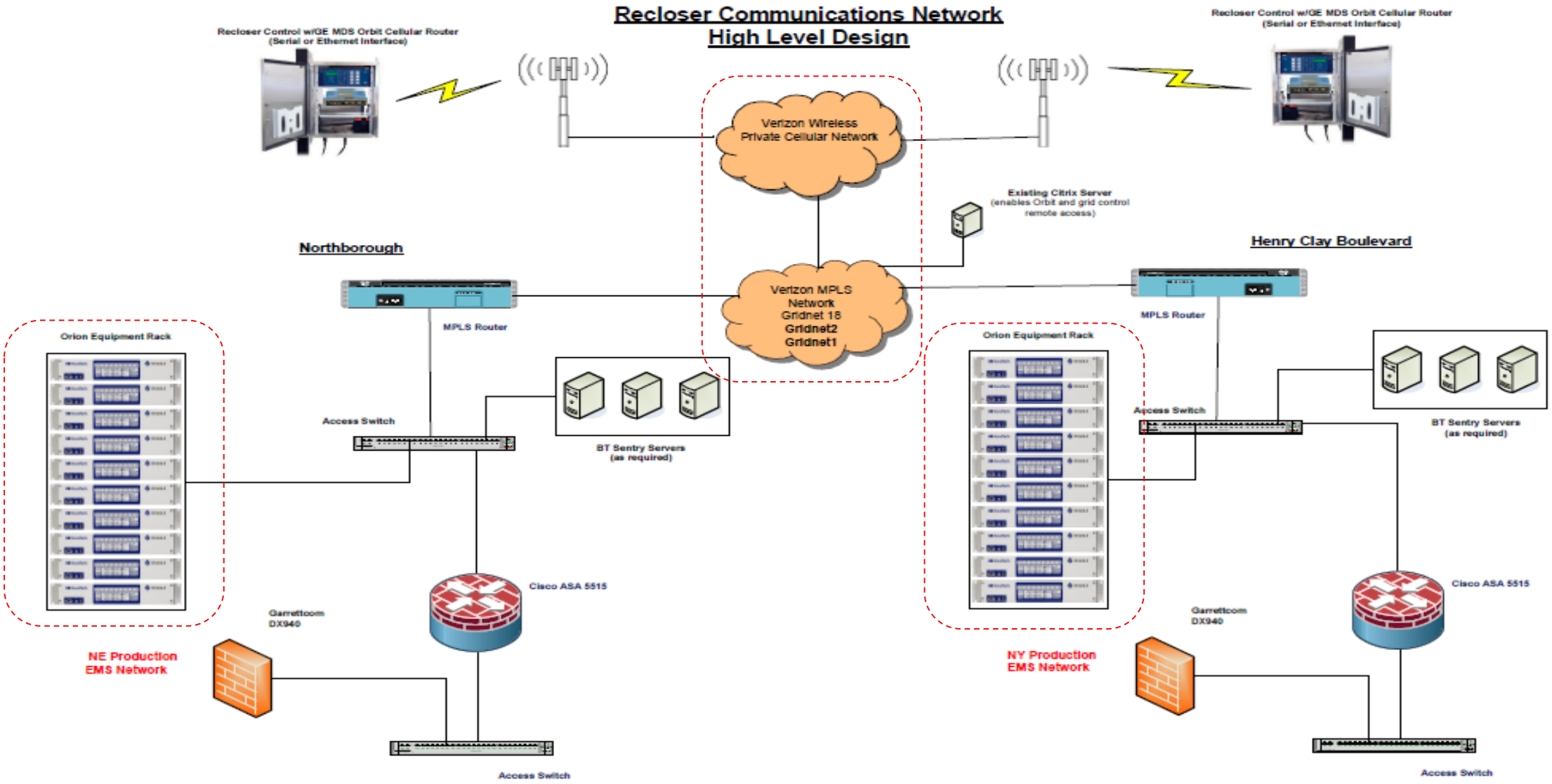

Existing automated protection devices

nationalgrid
HERE WITH YOU. HERE FOR YOU.

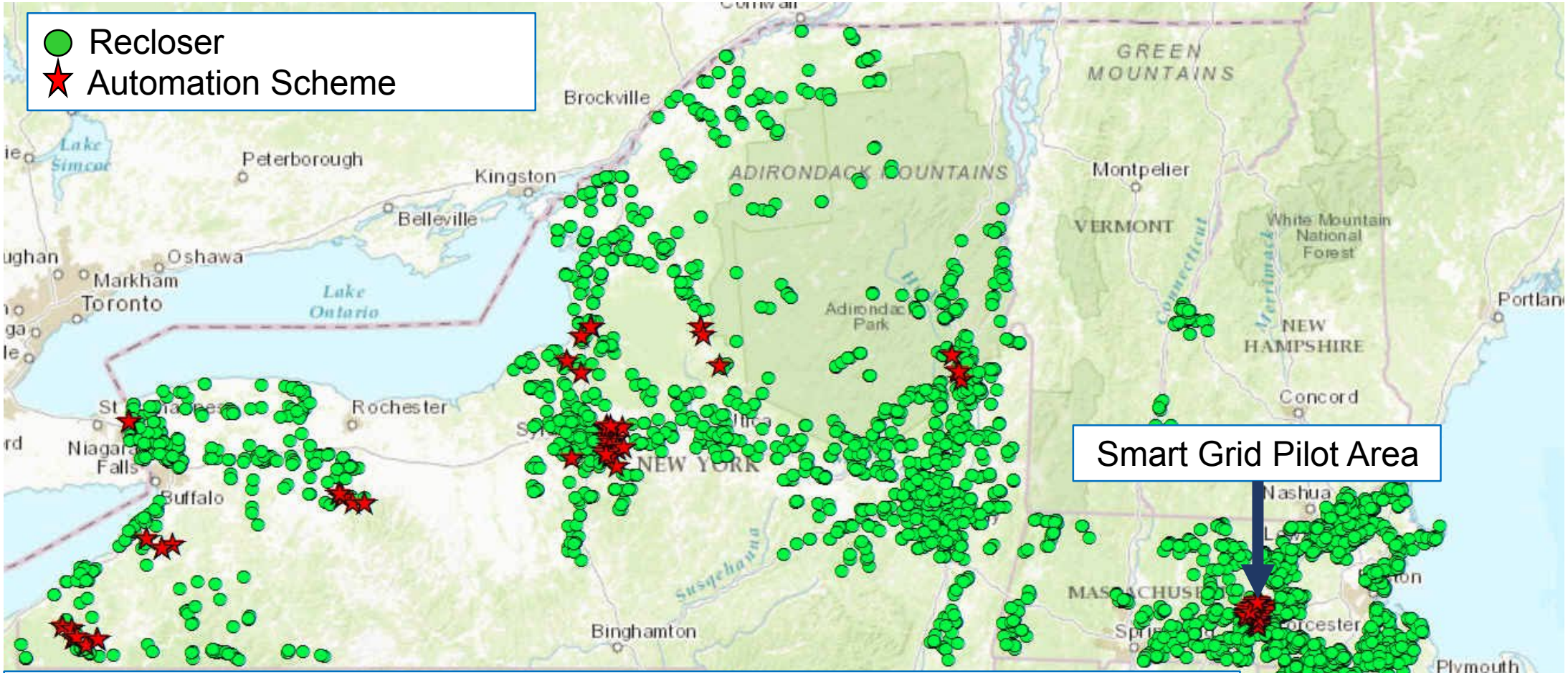

- 3030 distribution line reclosers across the system
- 35 sectionalizing reclosers installed on the 34.5kV Sub-T
- 1939 reclosers with telemetry to SCADA

Existing automation challenges

nationalgrid
HERE WITH YOU. HERE FOR YOU.

- Very low latency requirement for adequate deployment ($$$$). In the past, this was considered a limitation for Cellular deployment
- Additional hardware to enable automation schemes needs to be installed on-site. This translates into new standards and training for crews and technicians (time and $$$)
- Hardware malfunction to integrate third party equipment. Some of the additional components have shown propensity to electrical failure (downtime)
- Lengthy process for firmware upgrades. This has translated into long periods of automation schemes being disabled (downtime)
- Lack of flexibility for customized performance and event logging. This makes the reporting and troubleshooting process cumbersome (time)

Automation new solution

nationalgrid
HERE WITH YOU. HERE FOR YOU.

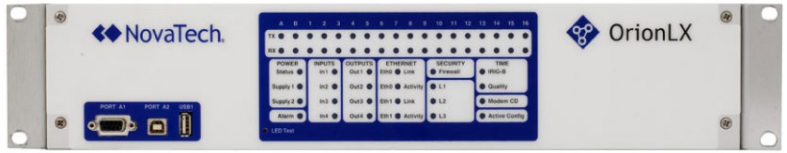

Each data concentrator can host D/A schemes with the following limitations:

- 512 Devices
- 64 Zones
- 32 steps per Zone
- **Supports virtual devices**

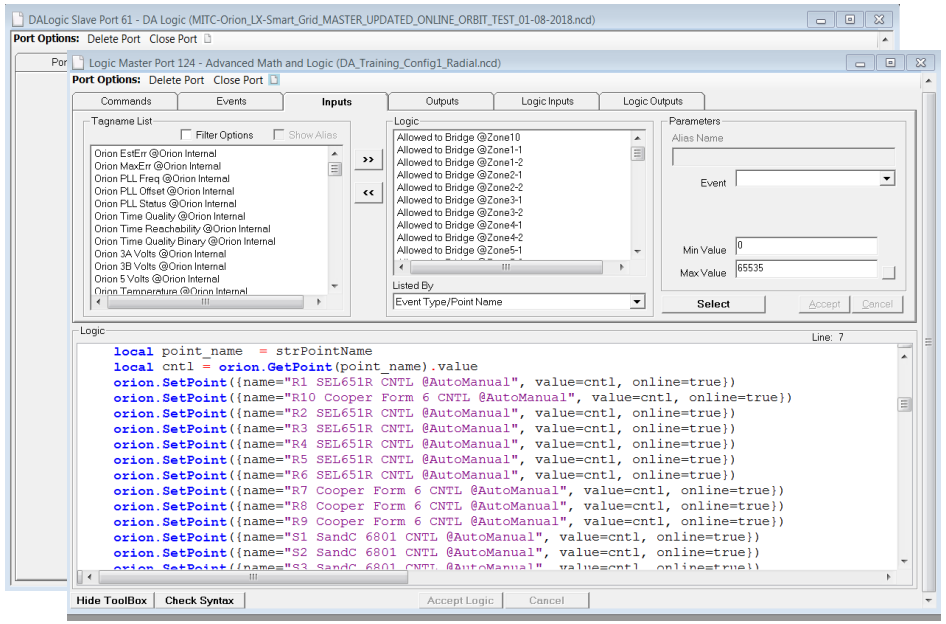

The D/A pack allows for:

- Definition of zones of protection
- Specification of sequence of operation
- Setting of desired outputs

The Advanced Logic & Math Pack allows for:

- Enhancement of D/A Logic
- Customization and complex operation

Characteristics of new approach

nationalgrid
HERE WITH YOU. HERE FOR YOU.

- Cellular solution has been able to provide 100ms latency with high levels of reliability. This has allowed for “fast enough” operation for typical isolation and restoration activities
- Having a cellular enabled solution, allows for simple activation of Distribution Automation functionality with minimal communication infrastructure development
- The need for additional hardware to enable automation has been eliminated. This will simplify installation and commissioning
- As the new communication network approach is based on data traffic through concentrators, the integration of external devices (such as feeder monitors, DG metering) has become straight forward. This opened the doors for more complex automation schemes (DG tripping, etc.)
- Logging of events and sequence of operation has become fully customizable, enabling the programming of reports fitting the individual needs

Automation Optimization Lab - Equipment

nationalgrid
HERE WITH YOU. HERE FOR YOU.

- Commonly used units
- Diverse communication
- Fault emulator with 3 different sources

Automation Optimization Lab - Testing

nationalgrid
HERE WITH YOU. HERE FOR YOU.

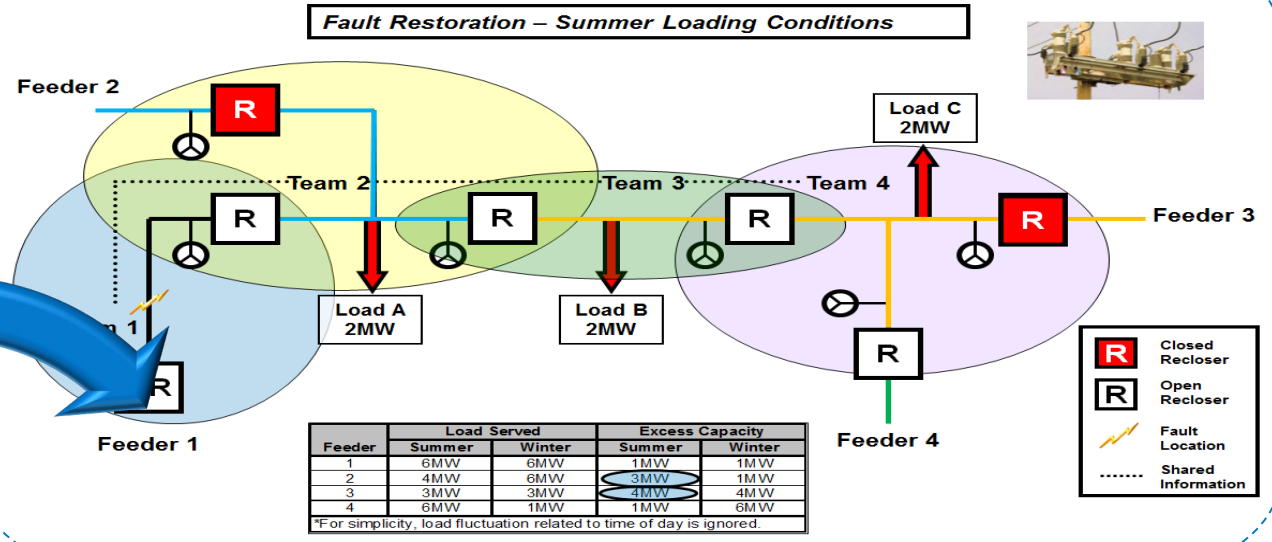

Feeder	Load Served		Excess Capacity	
	Summer	Winter	Summer	Winter
1	6MW	6MW	1MW	1MW
2	4MW	6MW	3MW	1MW
3	3MW	3MW	4MW	4MW
4	6MW	1MW	1MW	6MW

*For simplicity, load fluctuation related to time of day is ignored.

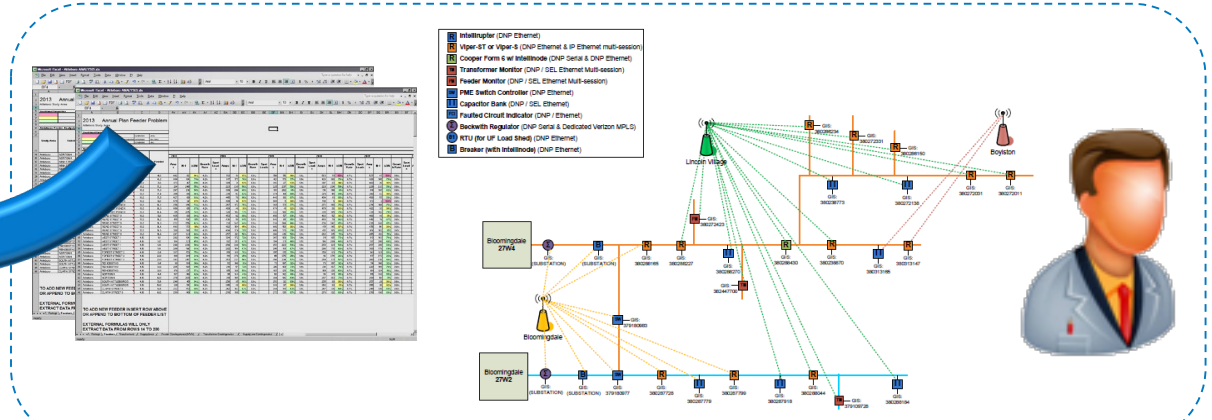

Example

nationalgrid
HERE WITH YOU. HERE FOR YOU.

Simple 34.5 kV project with 3 SEL651R reclosers with cellular Communication

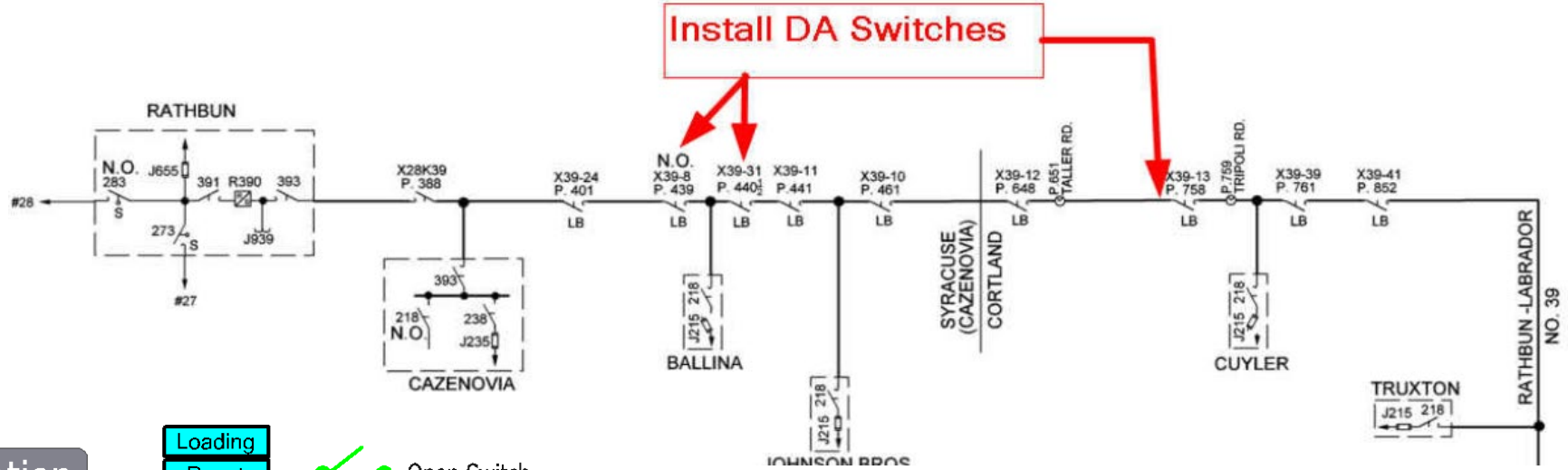

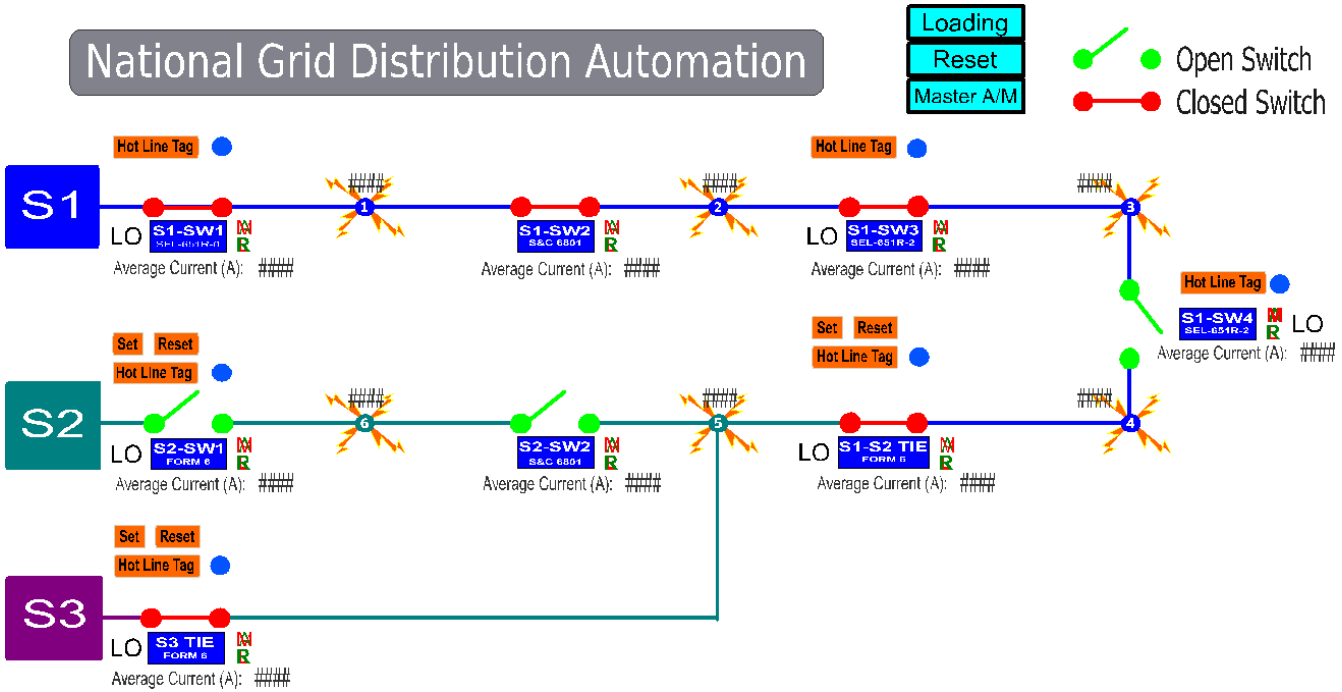

Implemented and troubleshot it in the lab environment using the same infrastructure to be deployed

Development

nationalgrid
HERE WITH YOU. HERE FOR YOU.

Modular LUA programming and library of commonly used functions is being developed to avoid repetitive coding and allow for maintenance simplicity

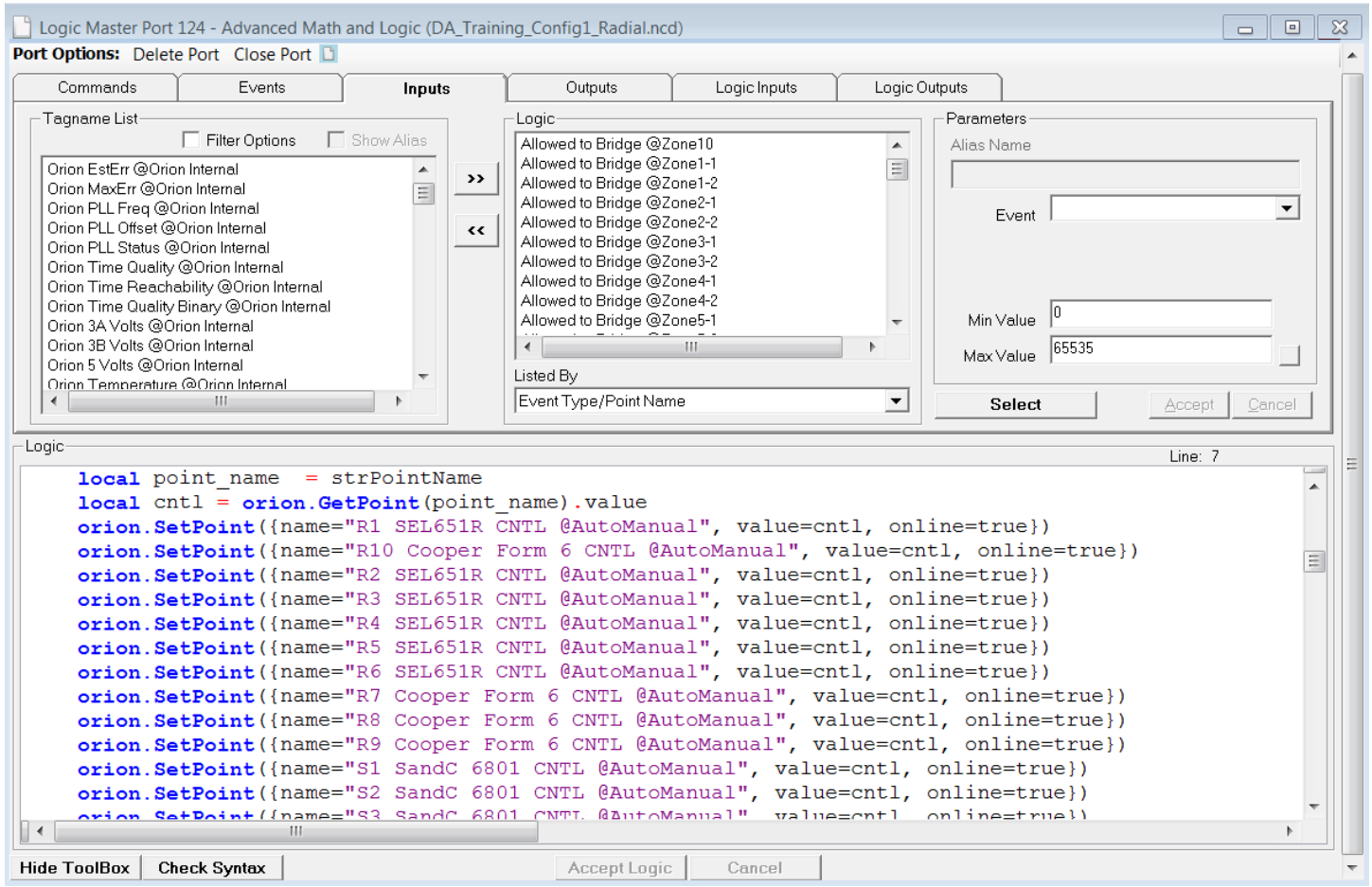

- File management (read/write) to support simplified implementation
- Standardization of Virtual device/points to support advanced functions
- Collection of data to fine-tune automation (location-based load, comms latency, etc.)
- Log format standardization

Summary

nationalgrid
HERE WITH YOU. HERE FOR YOU.

The recently developed flexible communication and IT infrastructure has opened the door to a simplified way to deploy D/A schemes through wireless communication.

This will provide the following benefits:

- Self-reliance for Distribution Automation deployment
- Elimination of on-site hardware malfunction problems
- Reduction of “offline-time” due to software updates/upgrades
- Reduction on project-related communication infrastructure development
- Simple integration of external devices to the automation schemes (enabling more complex solutions)
- Improved and customizable events and performance reporting capabilities

Aligned with the company’s continuous search for improved solutions, these benefits have sparked the interest on using this approach in other areas (VVO/CVR, etc.)

Thank you,

Questions?

jorge.valenzuela@nationalgrid.com