21, rue d'Artois, F-75008 PARIS
http : //www.cigre.org

CIGRE US National Committee
2017 Grid of the Future Symposium

VELCO Essex STATCOM – A Versatile Transmission Solution

C. ROOT[1], J. BURROUGHS[1], J. SEBASTIAO[2], A. EYBALIN[2], J. HU[3], B. BISEWSKI[3]

Vermont Electric Power Company[1],
PwC Advisory Services[2]
RBJ Engineering Corp[3]

USA

SUMMARY

Vermont Electric Power Company Inc. (VELCO) recently completed the refurbishment of its Static Synchronous Compensator (STATCOM), a unique and versatile facility supporting its 115kV transmission network in Chittenden County, Vermont. This facility addresses a wide range of system needs including continuous voltage regulation, dynamic voltage support and power quality. The STATCOM was originally placed in service in 2001 and underwent a significant refurbishment in 2017 due to equipment and controls obsolescence.

Some key features of the STATCOM include:

- Utility scale application of a widely used industrial product on a condensed footprint
- Equipment and component level redundancy to achieve high reliability and availability
- Parallel operation of two STATCOMs with modular architecture
- Low noise harmonic emission requirement
- Capacity reserve function to adjust the STATCOM dynamic response by controlling (6) mechanically switched capacitors (MSCs)
- Severe system events ride thru requirements

This paper provides an overview of this unique application which leverages advanced power electronics and addresses today's challenging transmission system need and operation environment. Voltage stability and voltage control have become increasingly difficult with the growth of intermittent wind and solar power generation and system load conditions. The paper introduces a brief overview of the STATCOM general architecture, its characteristics and general performance, its critical role in providing transmission system support, and some construction highlights related to the facility refurbishment.

KEYWORDS

Flexible Alternating Current Transmission System (FACTS), Static Synchronous Compensator (STATCOM), Injection-enhanced gate transistor (IEGT), Power Quality, Voltage Stability, Grid Modernization, Voltage Control

croot@velco.com

I. Introduction

In 2001, Vermont Electric Power Company decided to install a FACTS device as part of an overall critical reliability upgrade to address transmission dynamic system voltage support requirements. After 15 years of reliable operation of this facility, VELCO conducted a full condition assessment of this facility to review equipment obsolescence and maintainability issues [1]. The STATCOM solution was retained based on technical and economic merit after reviewing and evaluating multiple transmission solutions as well as other types of FACTS and conventional voltage support devices such as Static Var Compensators (SVC) and Synchronous Condensers (SC).

II. Essex STATCOM Overview

a. Plant Architecture

This facility often referred to as the Essex STATCOM is in fact two individual STATCOMs connected to the 115kV network via two 115/3.2kV – 43MVA interface transformers. Each STATCOM provides +/- 37.5MVAR dynamic reactive power capability. The original design included two (2) additional 115kV / 24.75 MVAR mechanically switched capacitor banks (MSCs) in the FACTS yard, which could be controlled by the STATCOM controller giving the facility the ability to offset its overall dynamic range. Each STATCOM also included a 5 MVAR harmonic filter bank on its 3.2kV bus. In addition, because of Harmonic performance concerns one of the 115 kV MSCs was always required during the operation of the facility. The effective full dynamic range of the STATCOMs including the two MSCs was +133/-41 MVAR. Figure 1 depicts a simplified one-line diagram of the STATCOMs and MSCs connection to the 115kV Network.

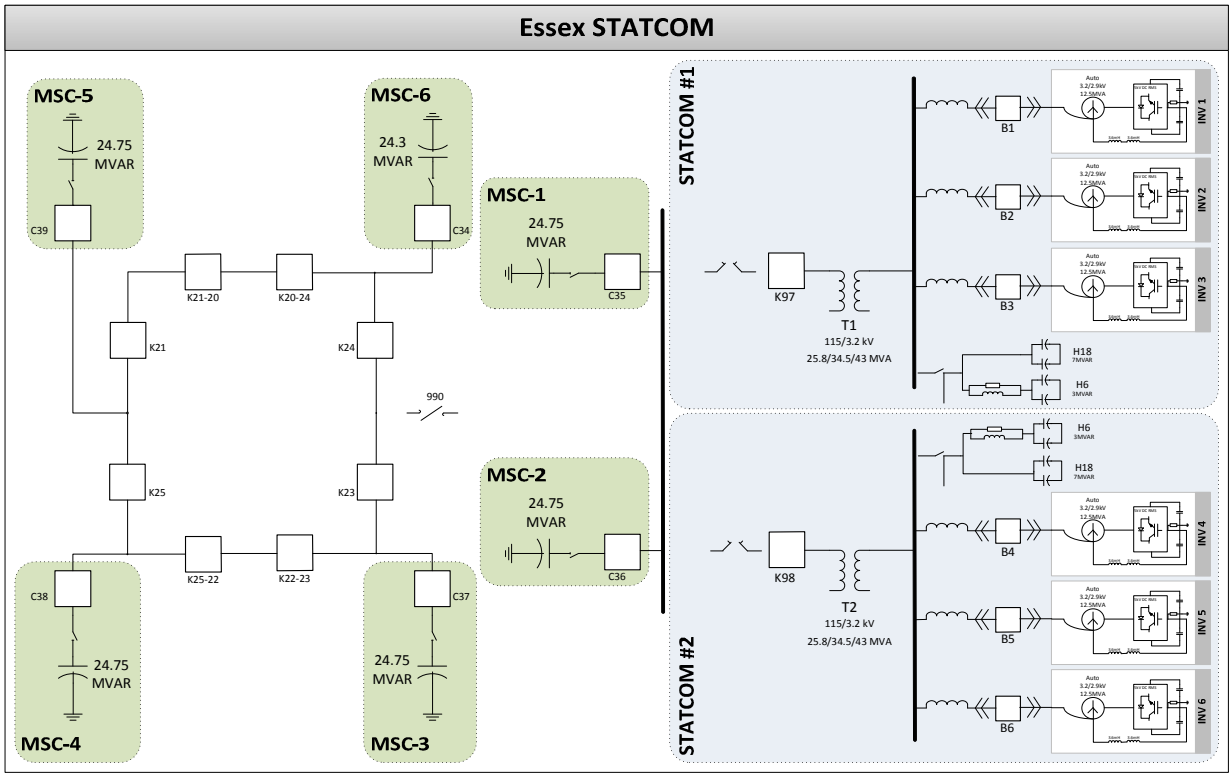

Figure 1 - Essex STATCOMs and MSCs simplified oneline

While the (6) inverter arrangement across two STATCOMs provides the full +/- 75MVAR dynamic reactive power response, the STATCOM control system also leverages the six (6) MSCs to optimize equipment usage at the site. Combined, the STATCOMs and MSCs provide great flexibility for the operators to control the system voltage on the 115kV network. The plant level controller also insures close coordination between the various reactive devices available at the site with minimal operator intervention. The filtering concerns were resolved in the refurbishment project but requiring an increase of filter size to 10MVAR on each 3.2kV bus. This hybrid application, STATCOMs + MSCs, achieves the full dynamic and steady state rating of approximately +240/-55 MVAR reactive compensation[1].

Picture 1 - New STATCOM Filter Arrangement – 2x 10MVAR

b. Inverter Drive and IEGT Technology

In the original STATCOM configuration, the dynamic reactive power was split between (2) parallel STATCOMs to provide redundancy and ensure that some capability would always be available even in the event of major equipment failure. Further modularity in the design arose as a result of the maximum available inverter size of 12.5MVAR which resulted in a total of six (6) inverters. The inverters were adapted from industrial motor drive technology using GTO switching devices. The modular configuration with each inverter enclosed in an LV switchgear allowed for a compact design, modest footprint, flexible maintenance on individual inverters unlike more common arrangement with a single inverter in a conventional valve hall. It also offered greater flexibility for future capacity expansion. The modular drive configuration also plays a key role in the total availability and reliability of the Essex STATCOM as discussed later in this paper.

Picture 2 – Essex STATCOM 12.5 MVAR Inverter

[1] 1.0 pu equivalent rating

Due to concerns over control system obsolescence, VELCO reviewed available options to extend the life of the facility. After completing this facility condition assessment and reviewing alternatives that would meet the performance requirements, it was found more economical to retain the same overall architecture and conduct a selective equipment replacement strategy. There were also schedule advantages for implementing a refurbishment project compared with a greenfield replacement project.

The power electronics used in the new inverters leverage the latest IEGT technology in a press pack configuration which was developed from the IGBT technology. Both IGBTs and IEGT have the advantage of being able to be turned off very quickly to suppress prospective fault currents on the upswing before the current exceeds the maximum turn-off capability of the devices. Another key advantage of the IEGTs over IGBTs is that they fail in short-circuited mode rather than open mode. This avoids the need to provide a separate bypass mechanism or enclosure to limit damage in the event of IGBT failure, which results in a smaller power electronic assembly.

Thus, the new inverters are based on robust extensively proven industrial motor drive configuration equipped with the latest generation power electronic switching devices. This is combined with a modular construction and redundancy of control and protection systems to achieve the performance and reliability requirements for this facility.

III. The STATCOMs' Critical Transmission System Support

a. Voltage Control – Perfect fit for a STATCOMs – MSCs Hybrid Solution

While the (6) individual mechanically switched capacitors (MSCs) available at the Essex station could be used to support voltage in VELCO's 115kV network, using them results in many discrete voltage steps and potentially large voltage discrepancies for large load changes if the STATCOMs dynamic absorption capability were not available. The combination of the MSCs, the two STATCOMs provides multiple levels of system redundancy needed to provide continuous voltage control in today's operation of a modern electric transmission grid.

The design of the STATCOM controls system and plant level controller which oversees the dispatch of the MSCs provides a wide range of voltage control options to the system operators. The area experiences almost continuous voltage variation over the course of the day as load increases, renewable resources (i.e. solar and wind) start producing, and later in the day as the load demand starts dropping. Coping with the voltage variations has become more challenging after the retirement of a 600MW / 200MVAR generator which supplied a relatively large amount of reactive power needs to the network and provided steady voltage support in the state. In short, with the increase in distributed generation and intermittent renewable resources connecting to the grid, and most of the conventional generation connected to the sub-transmission network, the Essex STATCOM plays a more critical role in controlling the transmission system voltage.

b. Voltage Stability under System Contingency - Ride thru capabilities

Under severe contingencies, the Essex STATCOM has demonstrated its capabilities in maintaining voltage stability in the Essex Area. System studies show that without the STATCOM the system voltage is extremely instable and would abruptly collapse. FACTS devices have historically played a critical role in providing voltage stability in areas where generation could not provide the capacity reserve required by the network. As more conventional generation plants retire or more renewable resources are integrated to the network, transmission system will rely more and more on these devices to provide voltage stability.

After reviewing years of operational experience with the existing facility, the new equipment specifications were adjusted to address the shortcomings of the previous equipment. A key enhancement with this refurbishment was the low voltage fault ride-through performance improvement which was made possible thanks to the improved inherent capability of the new power electronics and auxiliary equipment. The design of all the auxiliary system (i.e. cooling system, station service, etc…), was also carefully reviewed to ensure the ride thru capabilities was considered at all levels throughout the design of the new facility.

c. System Events and Grid Power Quality – Fast Response Time

The speed of STATCOM's response not only plays a critical role for dynamic voltage support during system events but also helps maintain power quality in the area. Chittenden County is the largest load center in Vermont and includes sensitive industrial customers. As part of the design and study phase of the project, the controls system was tested with extensive network simulations to optimize its response to the most severe fault conditions. The study results and review of recent system events show that the STATCOM can reach its full output capability between 2 and 3 cycles (approximately 35 to 40ms). As part of the design development and validation, multiple network simulations and studies were conducted using a Real Time Digital Power System Simulator (RTDS) in addition to traditional computer model studies conducted with PSS/e and PSCAD.

IV. STATCOM Refurbishment Project

a. Project Scope

The STATCOM refurbishment project included the replacement of the power electronics, the inverters and plant level controllers, ac harmonic filter banks, cooling systems and auxiliary equipment.

The scope of this project also included detailed engineering and design as well as system studies to ensure the new equipment would address current operational needs and network requirements which have evolved significantly over the last 10 years as multiple transmission reinforcements have taken place in the area. The technical solution developed during the scope definition allowed for critical components with remaining useful life such as high voltage primary equipment, transformers and STATCOM building to be reused. The combination of new equipment balanced the technical performance needs and site constraints while minimizing the overall project costs.

Picture 3 - Maintaining clearance to Energized Lines

As for any brownfield project, some of the construction challenges included working around energized equipment, construction activities in very tight work spaces as shown in the picture 3, and the lifting and rigging of heavy and sensitive equipment as shown in picture 4 and 5 in a sequence affected by equipment remaining in place. These challenges required careful construction planning, constructability reviews and careful design to ensure compatibility between old and new equipment.

Pictures 4 & 5 - Lifting one of the 26,000 lbs inverters over the building

b. Project Timeline and Outage Schedule

The project was executed on an accelerated schedule to address increasing risks associated with the old STATCOM components which had reached the end of their useful life and started exhibiting declining reliability. The outage constraint was also a major project execution challenge which required careful planning and coordination with other work taking place on the network. Construction activities were completed during an 8-week outage including demolition, installation of new foundations and erection of the new filter banks, installation of new cooling systems, and replacement of the inverters and control equipment inside the building.

Figure 2 - New High Efficiency Cooling System - Heat Exchangers

V. Conclusion

As briefly discussed in this paper, the Essex STATCOM is a versatile device providing critical voltage support to the transmission system and contributing to system reliability and improving the overall operability the grid. Indeed, there is an increasing need for voltage support devices as large generators are retired and replaced with an increasingly diverse generation mix, including intermittent renewable resources which have limited voltage support capability. Additionally, customers' expectations regarding the reliability of the network, voltage stability and power quality have further reinforced the need of devices such as the Essex STATCOM. The outage during the refurbishment project provided additional insights into the critical role the STATCOM plays in the daily operation of the grid.

The criticality of maintaining schedule, especially the construction outage window, and working within an energized station introduced multiple project execution challenges. Detailed planning of daily construction activities and troubleshooting of site issues allowed for the project to be completed on schedule and on budget, bringing the facility back online before the start of the transmission system demand peak load period. Since being restored to service in May of this year, the STATCOM has already responded to multiple system events.

BIBLIOGRAPHY

[1] Working Group B4-205 - Cigre 2016 – "STATCOM Life Assessment and Extension"
[2] Power Engineering Society Winter Meeting, 2001. IEEE "The VELCO STATCOM-Based Transmission System