Blackstart Hardware-in-the-loop Relay Testing Platform

Ren Liu, Washington State University
Rui Sun, Dominion Virginia Power

Content

- Introduction of Blackstart
- RTDS Blackstart Path Model Building
- Hardware-in-the-loop Relay Testing Platform
- Blackstart Relay Testing Results
- Summary

Introduction of Blackstart

- A combination of contingencies or operation errors may lead to a partial or complete system blackout.
  - 2003 Northeast blackout
  - 2011 Southwest blackout
- After a blackout, the system operator is responsible for taking a series of actions to restore the system and re-establish the integrity of the interconnection.
- The process of restoring the power system to operation is called blackstart.

Introduction of Blackstart

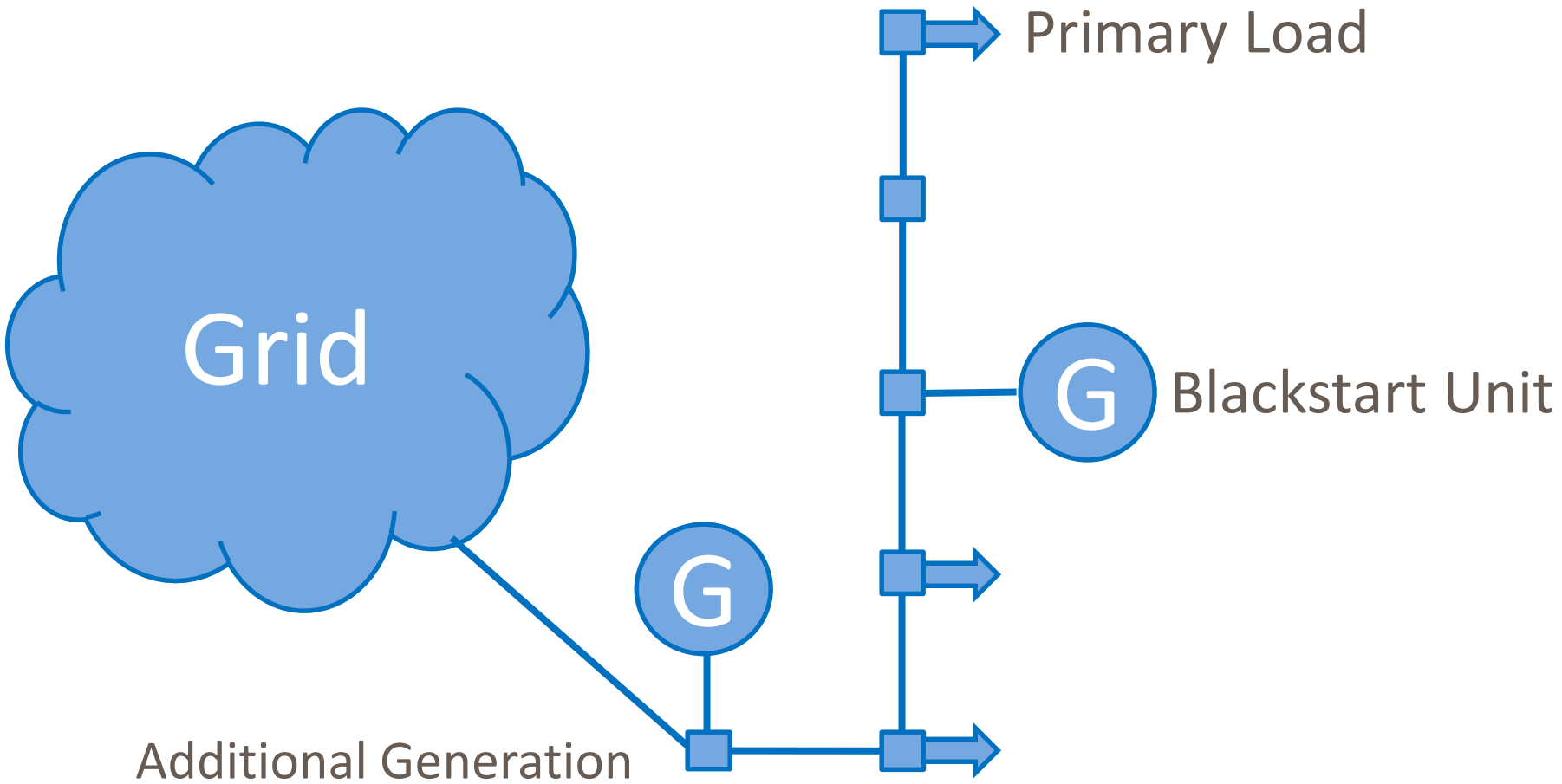

Motivation of Hardware-in-the-loop relay testing platform

- The generation capacity in each blackstart path is relatively small comparing with the normal operating conditions, which may lead to a small fault current.
- There are lots of switching operations during blackstart process, since the blackout system needs to be restored step-by-step.
- The possible small fault current and these switching operations during blackstart process may lead to the following problems:
  1. The fault current may be less than the relay pickup current.
  2. Time inverse overcurrent protection function may respond slower than system normal operation.
  3. The relay may misoperate during the blackstart switching transient.

Dominion RTDS LAB

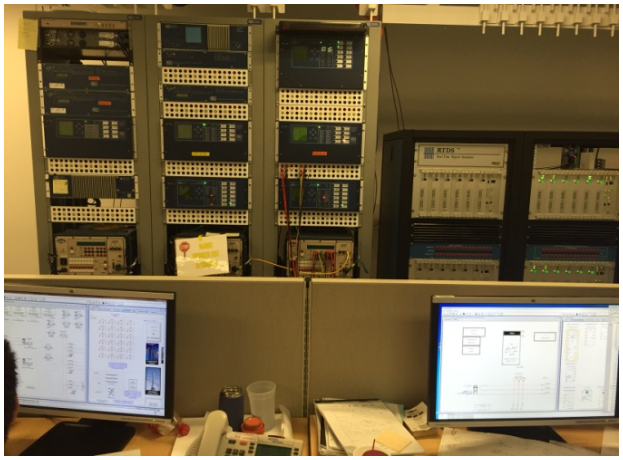
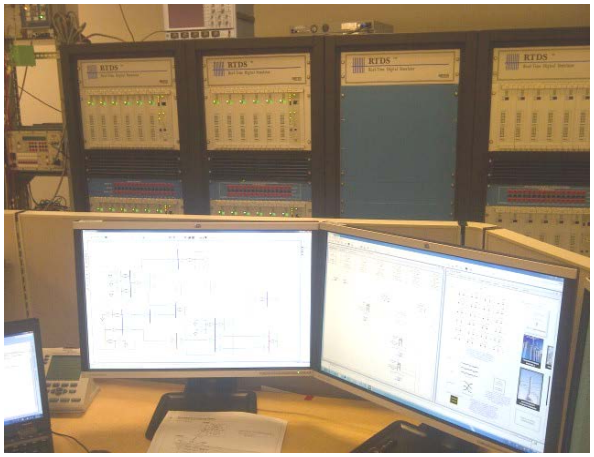

- Hardware – RTDS (6 full racks of PB5, 2 racks of GTNET)
- Relay panels – Major Protective Relays (SEL-311/351/421/487, RTU, data concentrators, SVC switch, doble, etc)
- Software: RSCAD, PSS\e, PSCAD, etc

Advantage of RTDS

- RTDS is a multiprocessor system, which is optimized for the power system real-time simulation.
- The operation speed of RTDS is very fast. The simulation time-step of RTDS is 50 microsecond.
- RTDS is utilized the Giga-Transceiver Input/Output (GTIO) cards to interface analogue and digital signal with external device.
- All these features enable the real-time hardware-in-the-loop capability of RTDS.

Blackstart path RTDS model

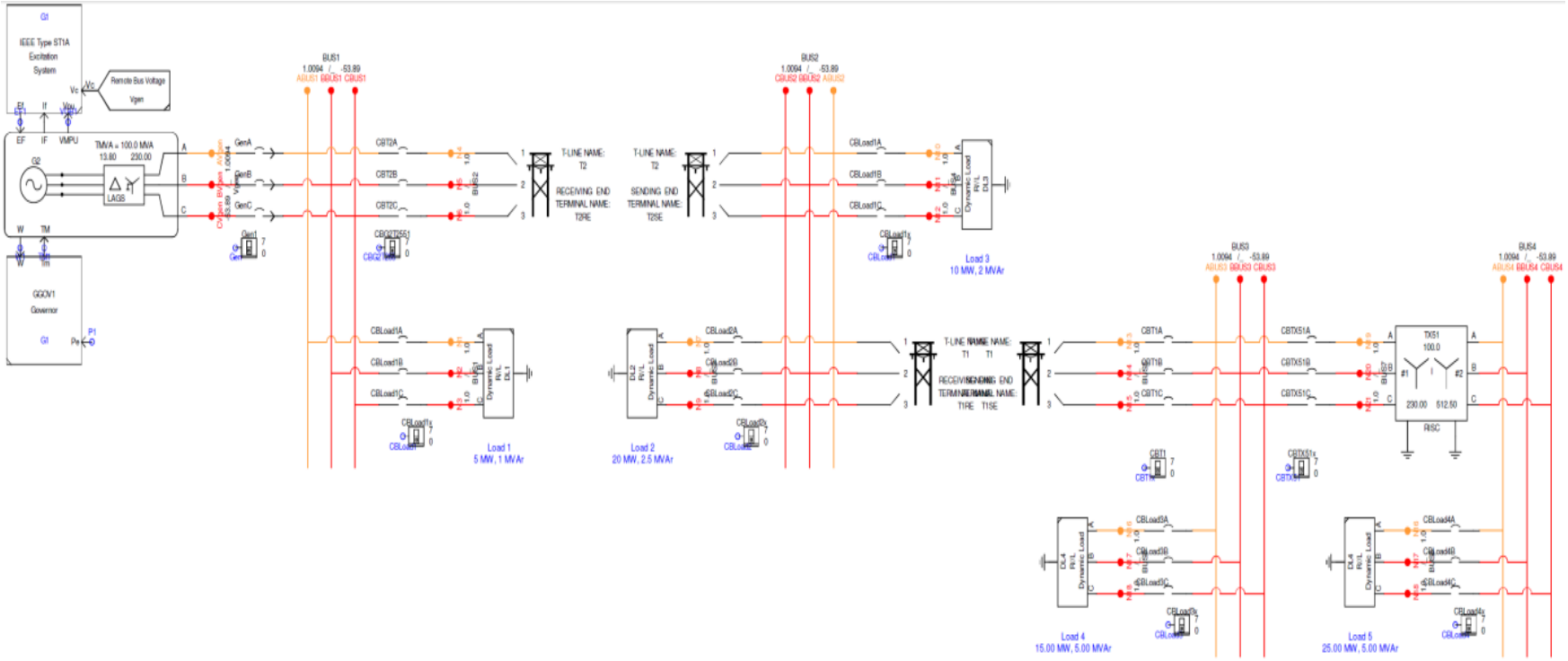

- One Dominion Virginia Power (DVP) Blackstart path is simulated in the RTDS.
- The Blackstart path RTDS dynamic model is converted from the MMWG East Interconnection model with the addition of some control components.

Hardware-in-the-loop Relay Testing Platform

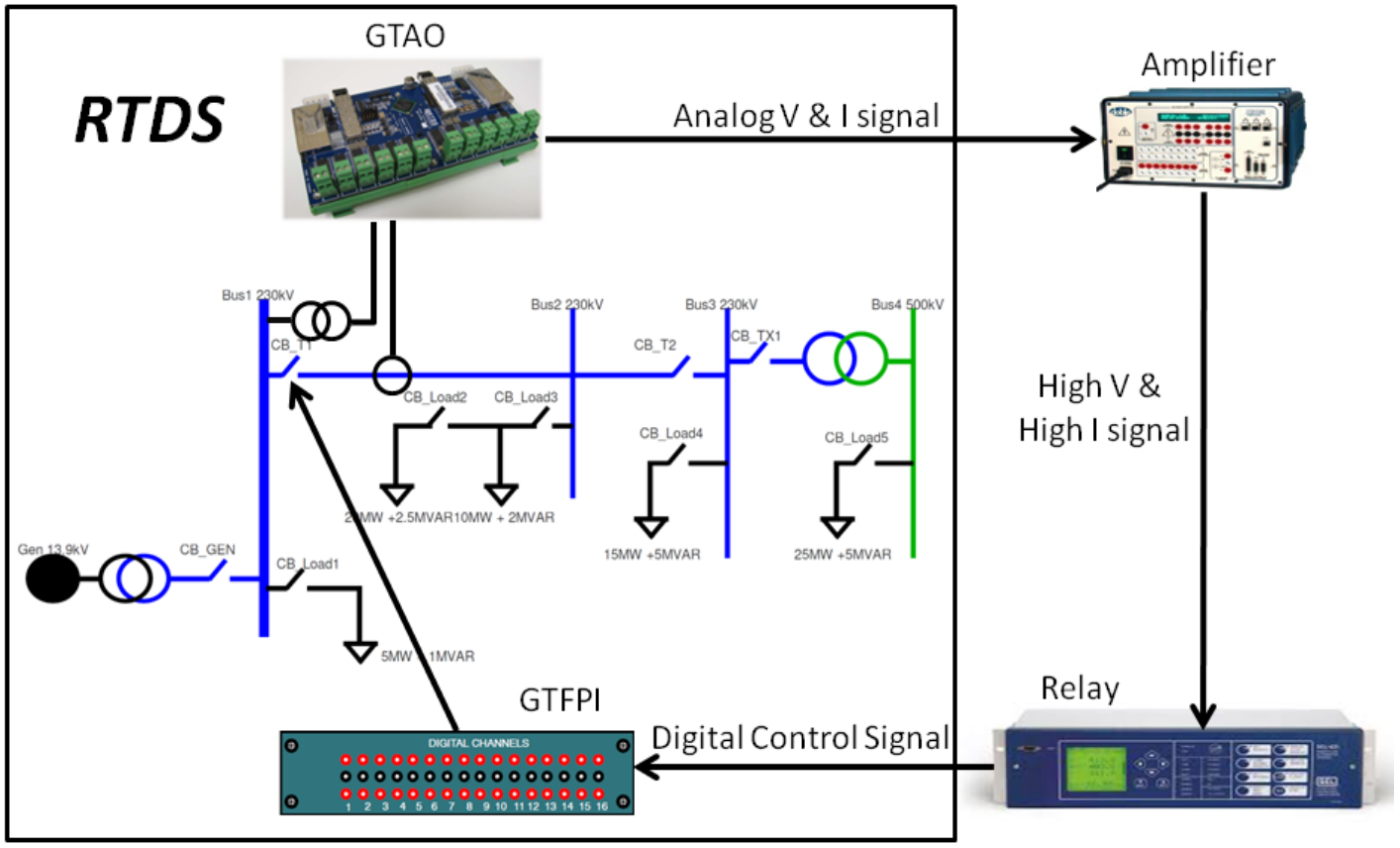

Blackstart Relay Testing Results

Three different test scenarios are designed to test the performance of the line distance protection function and time-inverse overcurrent protection during blackstart process.

1. If normal switching operations during blackstart process will cause relay misoperation.
2. If the relay can detect balanced and unbalanced fault occurance during blackstart process.
3. If the relay can detect pre-existing balanced and unbalanced fault conditions during blackstart switching operation. Operation speed of the time inverse overcurrent protection function is tested under different system conditions during blackstart process.

- No-fault during Blackstart switching event

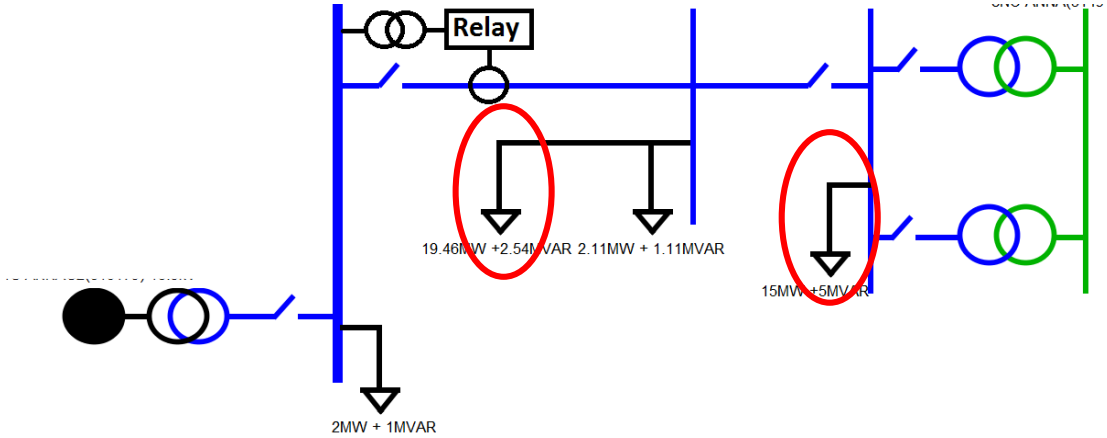

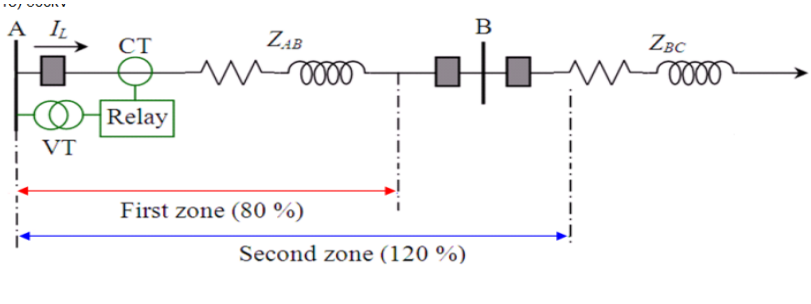

Relay: SEL-421 Line Distance Protection

- Blackstart switching event did not trigger Relay Function.
- Relay operates properly.

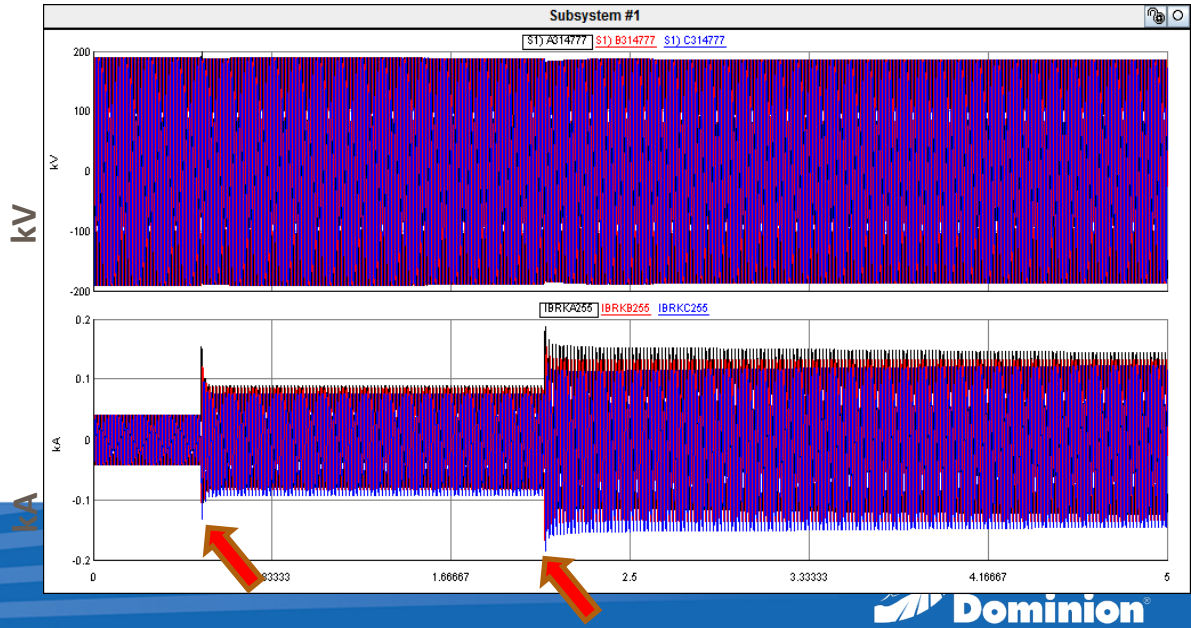

• Zone 1-Single Phase to Ground Fault during blackstart steady state

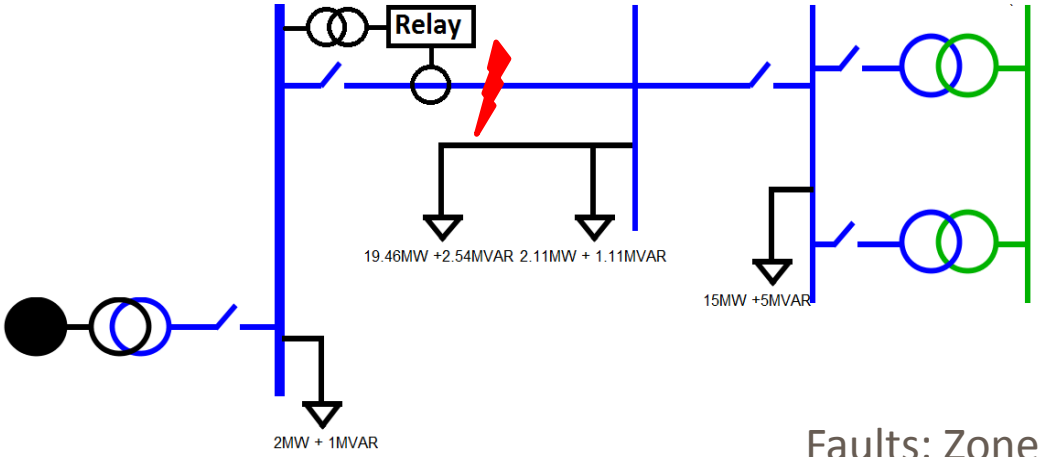

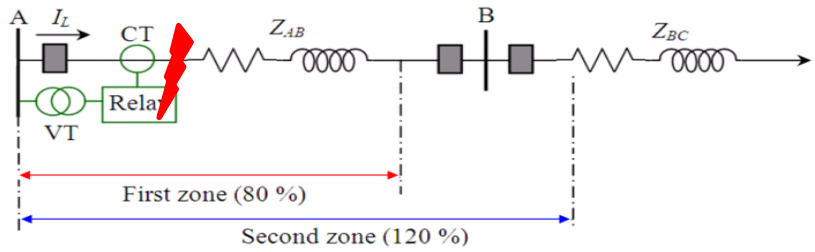

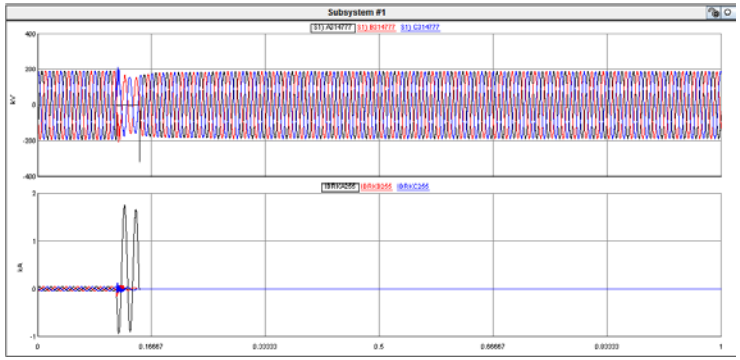

Faults: Zone 1, A phase to ground fault

Results:

- Relay takes two cycles to trip the circuit breaker
- Relay front panel shows:
  - TRIP
  - INST
  - ZONE1
  - PHASE A
  - GROUND
- Relay works properly.

- Zone 2-Phase to Phase Fault during blackstart steady state

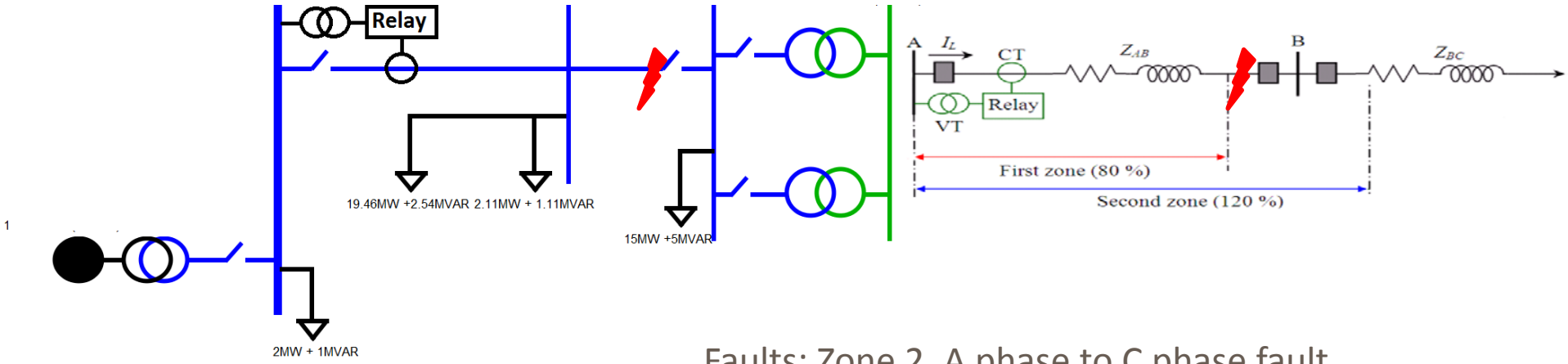

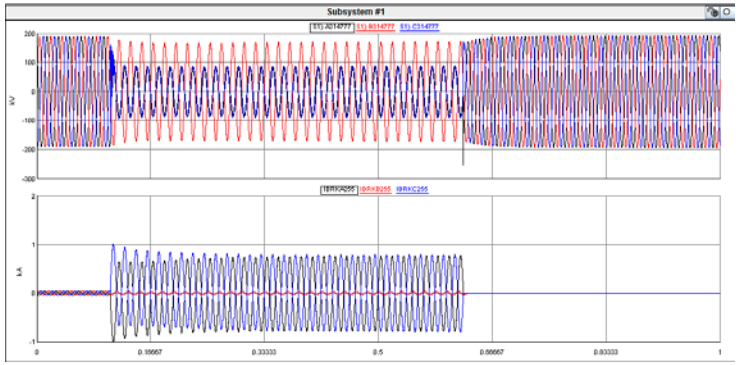

Faults: Zone 2, A phase to C phase fault

Results:

- Time-delayed backup Relay function waits for half second, then trips the circuit breaker
- Relay front panel shows:
  - TRIP
  - TIME
  - ZONE2
  - PHASE A
  - PHASE C
- Relay works properly.

- Zone 1-Single Phase to Ground Fault during blackstart switching operation

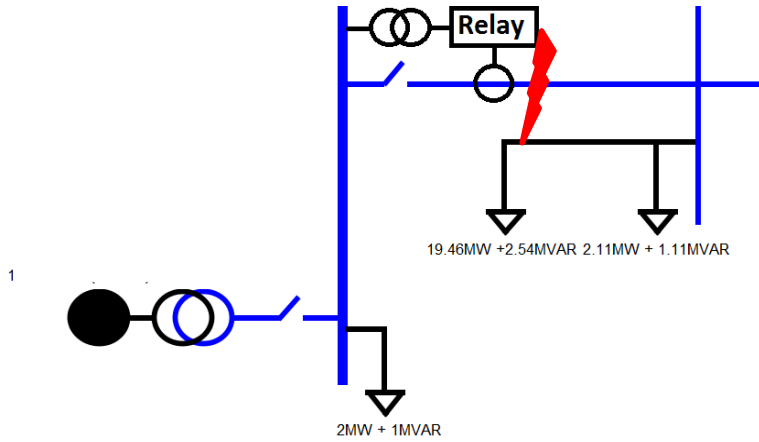

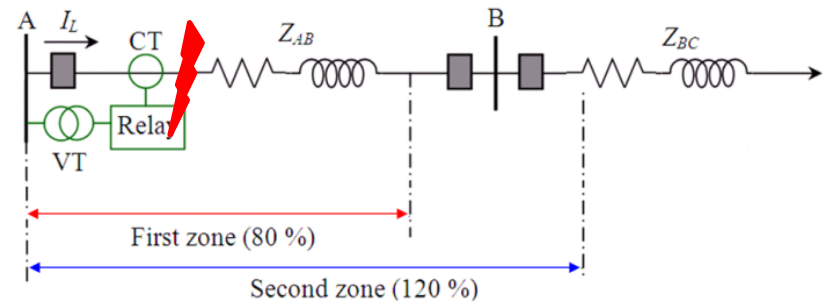

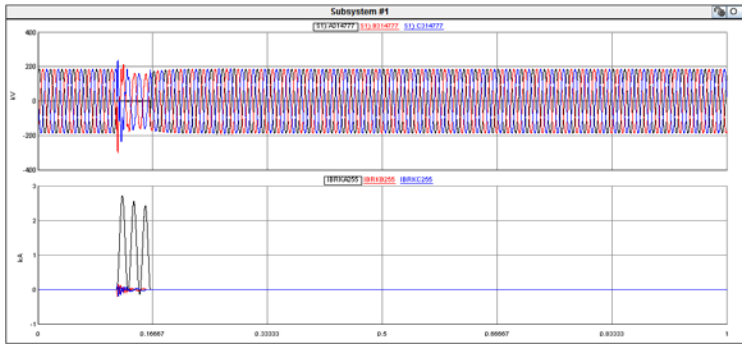

Faults: Zone 1, A phase to ground fault

Time: Fault happens when energize Transmission Line 255

Results:

- Relay takes three cycles to trip the circuit breaker
- Relay front panel shows:
  - TRIP
  - INST
  - ZONE1
  - PHASE A
  - GROUND
- Relay operation is delayed by switching.

Zone 2-Phase to Phase Fault during blackstart switching operation

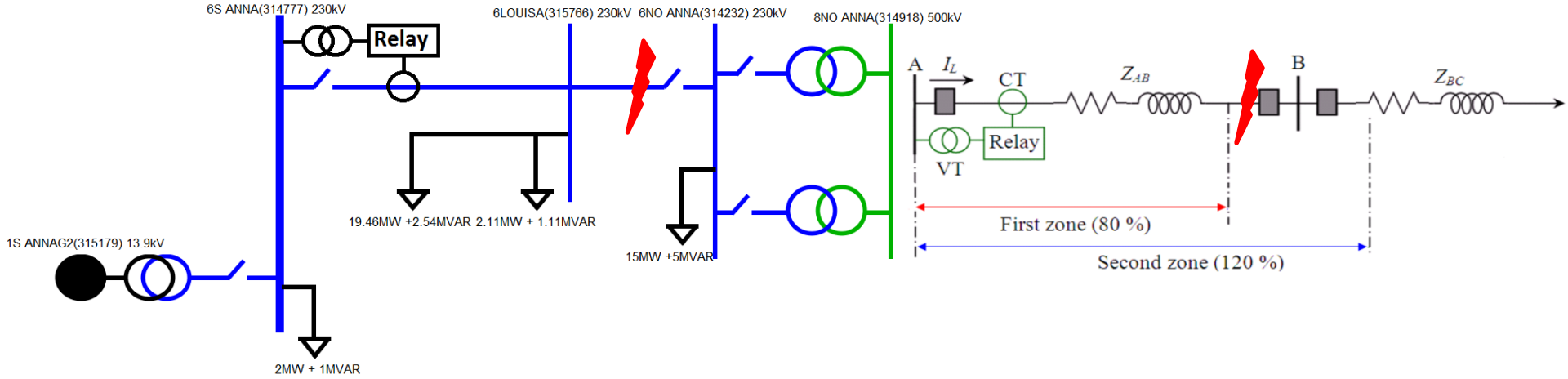

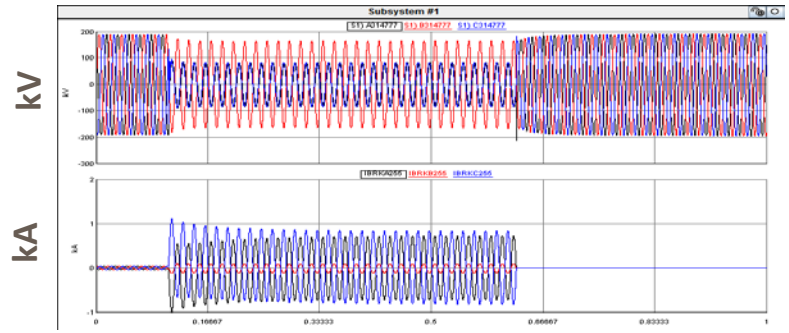

Faults: Zone 2, A phase to C phase fault

Results:

- Time-delayed backup Relay function waits for half second, then trips the circuit breaker
- Relay front panel shows:
  - TRIP
  - TIME
  - ZONE2
  - PHASE A
  - PHASE C
- Relay works properly.

- Time-Inverse Overcurrent Backup Protection Scheme Test

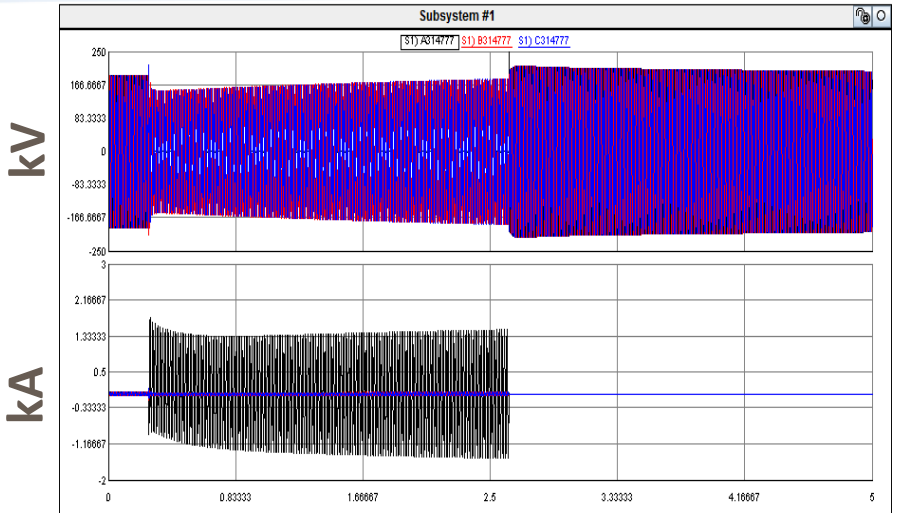

Small Load (5MW) Relay trip at 2.3s

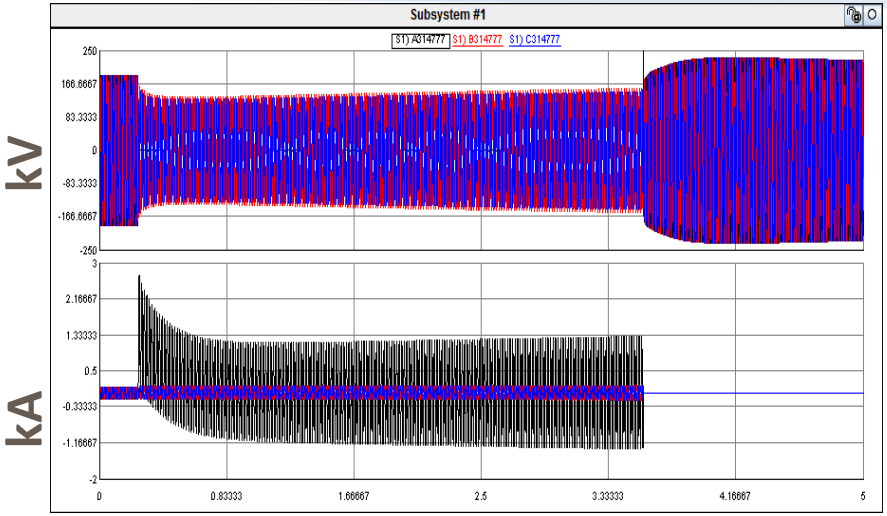

Large Load (40MW) Relay trip at 3.3s

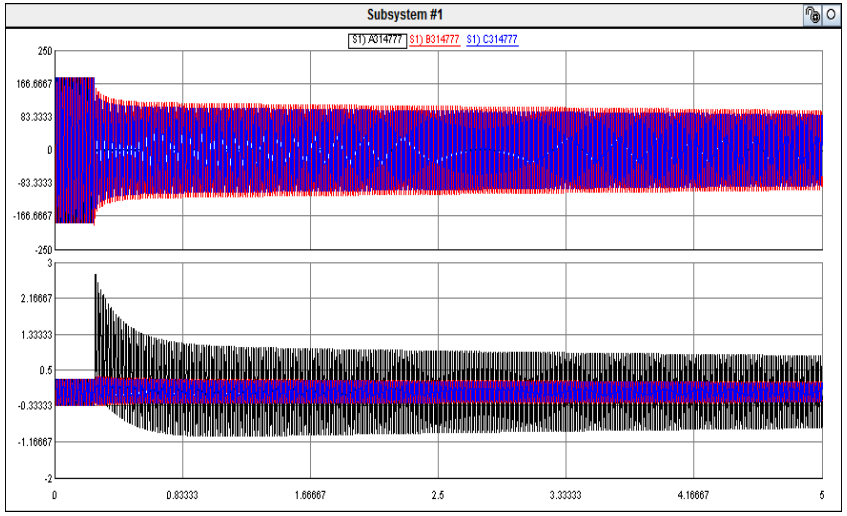

Larger Load (80MW) Relay didn't trip

Faults: A phase to ground unbalanced fault

Relay:

- Time-inverse overcurrent backup protection scheme
- Primary line distance protection is disabled.

Results:

- Overcurrent backup protection scheme is delayed and even don't operate.

Summary

- A hardware-in-the-loop relay testing platform is designed to test the performance of the relay during blackstart process.
- RTDS, amplifier, and actual relay are utilized to develop this platform.
- The functions of the line protective relays in the blackstart path are tested under different blackstart operation conditions.
- Possible problems are found for the relay protection functions.
- This real-time platform can also provide the assistance to the system operator when the real blackstart occurs.

Thank you
Questions?