Recovery from Large-Scale Events Using Oasis Microgrids

POWER ENGINEERS

Presented by: John Kumm

November 2, 2016

Motivation: Cascadia Subduction Zone

- Quake Every ~245 years
- Most Recent 316 years ago
- July 20, 2015 New Yorker Article
- Cascadia Rising Exercise
  - » 90th Percentile Scenario
  - » Catastrophic Losses
  - » >1M without homes or services

Black Sky Event Examples

- Natural Disaster
  - Earthquake
  - Super Storm
  - Geomagnetic Event
- Cyber Attack
- High-Altitude EMP Event
- Pandemic

After Bulk Electric System Loss

- Restore Basic Electric & Social Services
- Medical, Public Safety, Shelter, Communications, Utility Control
- Facilitate DER Activation
- Accelerate Full Restoration

Severe Event Chronology

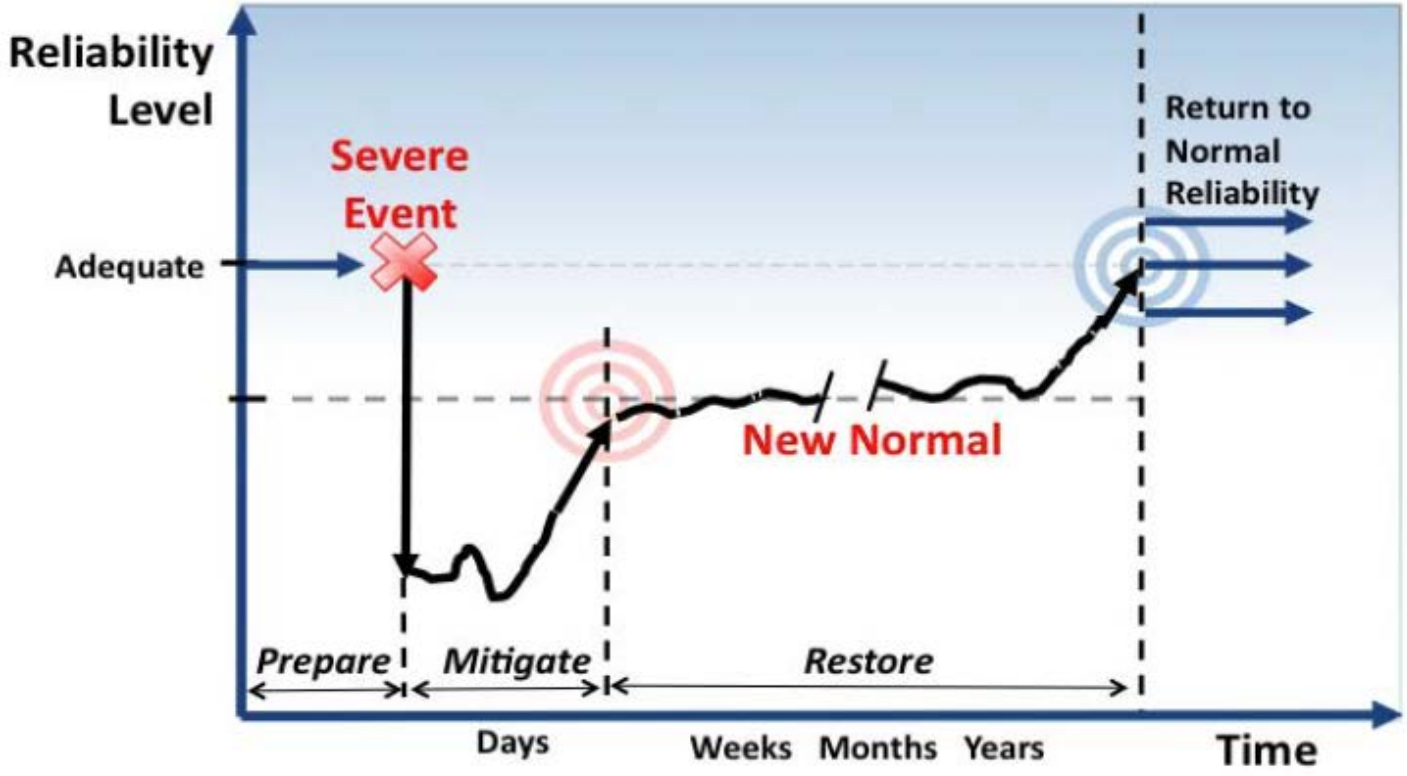

Example System (Pre-Event)

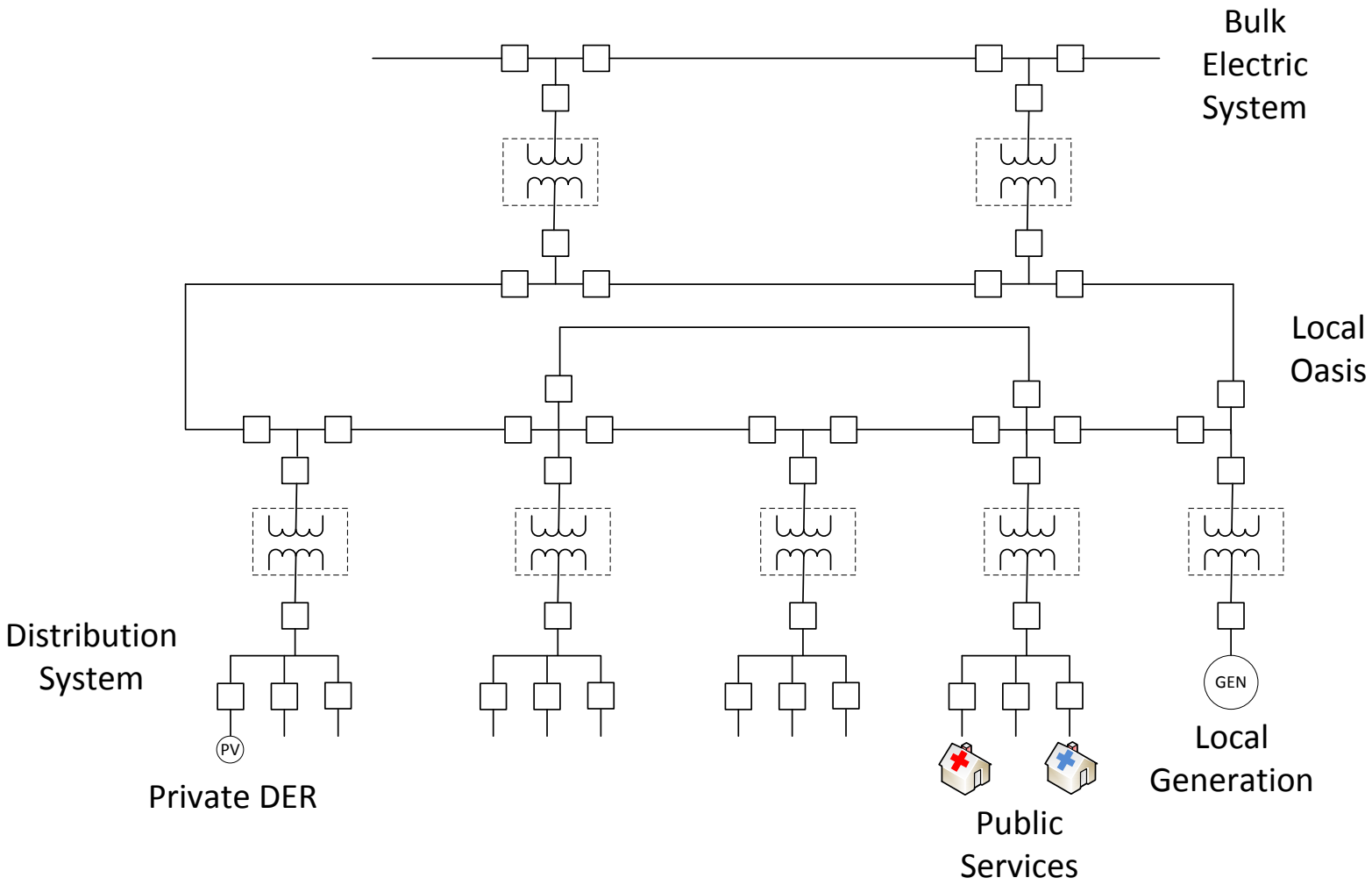

Example System (Immediate Post-Event)

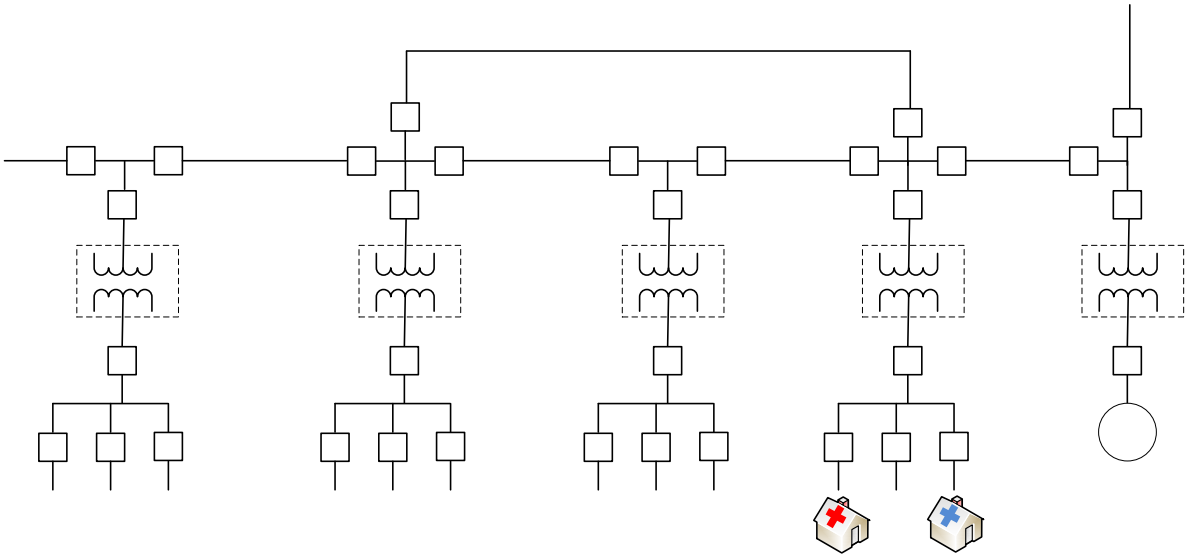

Limited Recovery (First Response)

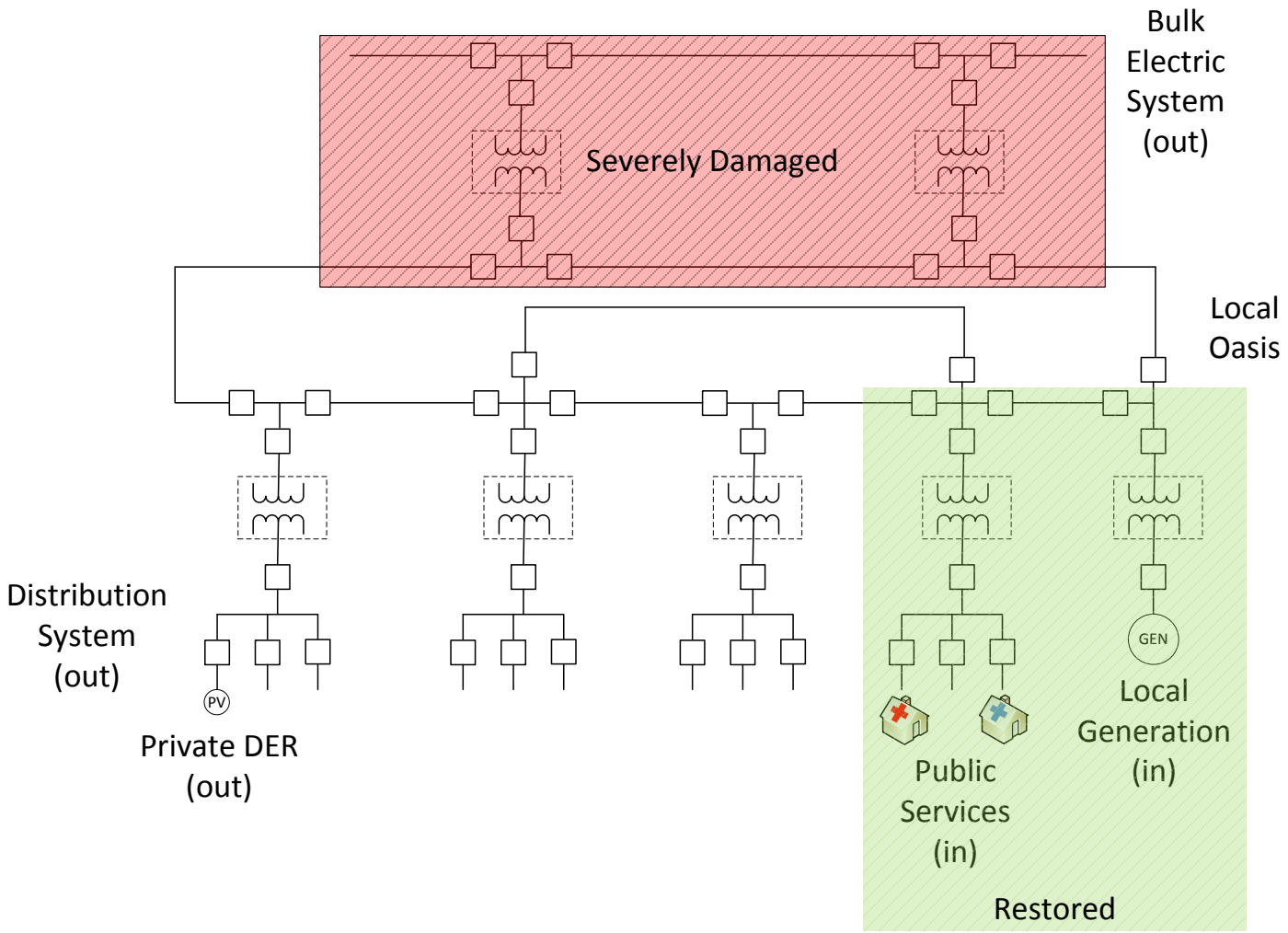

Additional Recovery Facilitates DER

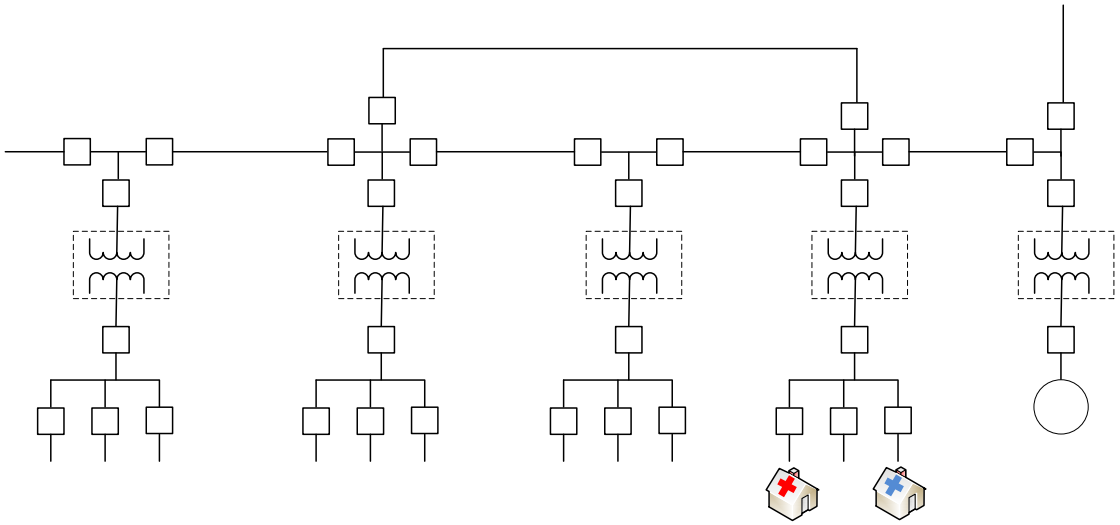

Maximal Recovery With Rotating Service

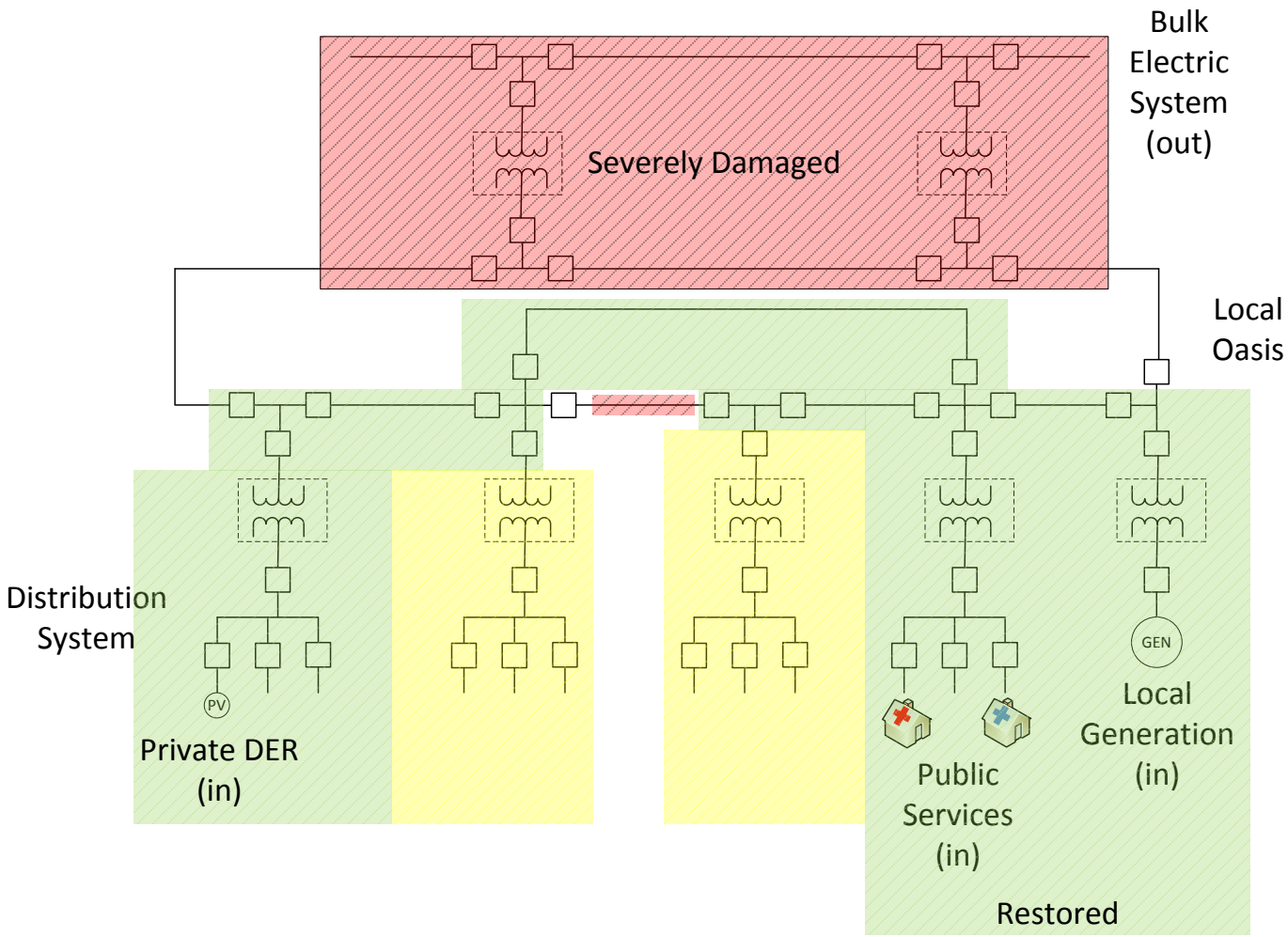

Creating an Oasis Grid

- Identify Supporting Assets
  - generation assets (authority to operate?)
  - transmission and distribution assets
  - VAR resources
- Identify Critical Load Circuits
- Review Black-Start Capability, Procedures

Creating an Oasis Grid

- Analyze Minimum Oasis for Stability, Loadability
- Review Controls for Operation, Isolation, Synch
- Review Protective Relaying for Coordination
- Relax Voltage and Frequency Relaying for Dependability

Extended Operation

- How long might BES be unavailable?
- How will actual damage impact plans?
- How do Distributed Energy Resources impact operations and restoration efforts?
- SCADA, communications, metering
- Physical and cyber security
- Operating staff availability, capability?

Additional Motivation

- Improved system understanding
- Preparedness for other events
- Increased renewables penetration

Oasis Grid Vision

- Speed Disaster Response/Recovery
- Improve Local Resiliency
- Encourage Resiliency/Renewable DER
- Create a Flexible Electric Grid That Can Operate Reliably at Nearly Any Available Scale.

Questions?