21, rue d'Artois, F-75008 PARIS
http : //www.cigre.org

2016 CIGRE International Colloquium

Impacts of High Levels of Distributed PV and Load Dynamics on Bulk Power Transient Stability

N.W. MILLER[1], K. CLARK[2]
[1]General Electric Company, [2]National Renewable Energy Laboratory, USA

SUMMARY

The addition of large amounts of wind and solar generation to bulk power systems that are traditionally subject to operating constraints set by transient stability and frequency response limitations is the subject of considerable concern in the industry in all North American grids. The US Western Interconnection is expected to experience substantial additional growth in both wind and solar generation. This generation will, to some extent, displace large central station thermal generation, both coal and gas-fired, which have traditionally helped maintain stability. A substantial fraction of the new photovoltaic solar generation will be deeply embedded in the distribution system and will be electrically in close proximity to customer loads.

Several aspects of this renewable generation on transient stability and frequency response have been investigated and reported elsewhere in summaries of a study that included investigation of the dynamic performance of the Western Interconnection with high penetrations of wind and solar generation. In this paper, modelling and the impact of distributed photovoltaic generation and dynamic loads are reported.

The key finding is that the transient performance, particularly the fault ride-through behaviour of embedded photovoltaic (PV), is critical to system stability. Poor ride-through characteristics on distributed generation are shown in the study to collapse the entire grid. The dynamic behaviour of the loads, aside from the embedded PV, is also shown to be a critical element. The investigation reinforces the need for valid models and for thorough system planning studies.

KEYWORDS
Distributed PV dynamics, Transient Stability, Load modeling

nicholas.miller@ge.com

INTRODUCTION

Maintaining power system reliability is essential with the continued growth of wind and solar generation. Transient stability, i.e. the dynamic behavior of the power system during the first few cycles to a minute following a system disturbance, is a key element of system reliability in all North American grids. The primary concern is that the power system return to a near equilibrium state that is acceptable to customers and equipment. Historically, interconnected AC power system dynamics were dominated by the well understood behavior of synchronous generators. But, the body of experience is extremely limited with regard to the impact of distributed generation, deeply embedded with system loads.

DISPLACEMENT OF SYNCHRONOUS GENERATION WITH WIND AND SOLAR

As the portion of wind and photovoltaic (PV) solar power in the overall energy mix has grown, these zero marginal cost resources tend to displace generation that incurs fuel costs. Unlike the past, when one type of synchronous generation would displace another during economic commitment and dispatch, wind and solar PV do not have synchronous generators. The dynamic behavior of these inverter-based resources can be quite different. This has given rise to concerns that transient stability, and therefore system reliability, will be adversely affected.

The Western Interconnection is one of the more transient stability constrained of the five major North American grids. Several studies, including those directed by the National Renewable Energy Laboratory and sponsored by US Department of Energy (DOE) have examined the west under possible near future conditions for which substantial amounts of wind and solar are built [1,2]. One recently completed project that was sponsored by the DOE Office of Energy Efficiency & Renewable Energy (EERE) Wind and Water Power Technologies Office and the SunShot Initiative builds on the preceding studies [3]. It looked at the dynamic behavior of the system at specific instants of time under a 33% energy based scenario with even higher levels of instantaneous wind and solar energy penetration.

Industry practice for evaluation of transient stability relies on detailed time simulations of a few snapshots in time. Big planning decisions are made on just a few estimated initial conditions. Thus, selection of meaningful snapshots is critical. In this study, base conditions included changes that the Western Electricity Coordinating Council (WECC) stakeholders deemed likely within the next 10 years. The initial study scenarios were from these WECC planning cases for light spring and heavy summer load conditions. Starting from these benchmark cases, tens of thousands of MW of new wind and solar plants were added to create cases with a "Hi-Mix" of renewables, or approximately 33% annual energy penetration at geographically (and economically) appropriate locations throughout the system. A special "composite load model" was added to thousands of locations to allow for a relatively sophisticated representation of the impact of embedded rooftop PV solar.

TABLE I

Renewable Generation Production for Scenarios

West-Wide Summary	Light Spring Base	Light Spring Hi-Mix		Heavy Summer Base	Heavy Summer Hi-Mix
Wind (GW)	20.9	27.2		5.6	14.3
Utility-scale PV (GW)	3.9	10.2		1.2	11.2
CSP (GW)	0.9	8.4		0.4	6.6
Distributed PV (GW)	**0**	**7.0**		**0**	**9.4**
Total =	25.7	52.8		7.2	41.5
Penetration (%) =	25%	56%			

The light spring cases represent a windy, sunny morning in the spring. Heavy summer cases represent a hot summer day with load at or near its peak. An overview of the renewable generation for the scenarios is shown in Table I. Penetration percentage for the light load cases is given as a fraction of the US portion of generation dispatch. The distributed PV noted in the table is a key subject of this paper.

COMPOSITE LOAD MODEL

Dynamic planning studies in WECC normally use a standardized load model. In WECC, this consists of roughly 20% induction motor and 80% static with voltage dependence, located at the transmission or sub-transmission level. For this investigation, the new WECC composite load model (CMPLDWG) was used [5], which represents the load at the distribution level and includes a significantly higher level of induction motors. The parameters for the composite load model were based on the WECC Modeling and Validation Working Group (MVWG) Load Model Data Tool, which takes into account regional differences in the characteristics of the load.

The topology of the composite load, as shown in Figure 1, is intended to give a more realistic representation of dynamic load behavior than present practice. The parameters of the four equivalent motors are particularly important for dynamics, as the tendency for motor groups to stall (or not) during major voltage depressions has a substantial impact on system stability. One of the key features of the composite load model include the ability to control whether stalled motors trip (by contactors opening) or continue running and drawing starting current. For this study, all motor tripping in the composite model is disabled because the motor stalling behavior has such a major and acutely non-linear effect on stability results. This is conservative, and allows for a simpler and more illuminating comparison between dynamic simulation cases.

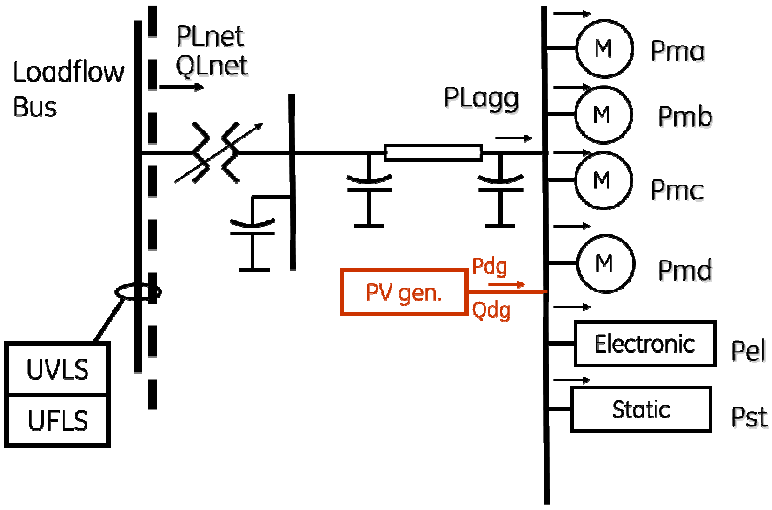

Figure 1. Composite load model topology.

This model was applied to most of the loads. Some loads were modeled as static with voltage dependence, or explicitly as large synchronous motor load,as follows :

For Light Spring:

4,420 composite load models, 95.1 GW total load + distribution losses; 22.3 GW (modeled as static)

For Heavy Summer:

4,408 composite load models, 143.9 GW total load + distribution losses ; 48.2 GW static

Modeling Embedded PV in the Complex Load

The new CMPLDWG model allows for addition of distributed PV (as highlighted in the figure). This model captures the potential effects of PV residing close to the load much better than the common practice of netting the PV and the load.

The ability of the PV distributed generation (DG) to ride through voltage and frequency excursions is handled by a separate logic. This rather complex allows selection of different levels of voltage and frequency excursion that will result in the DG blocking or tripping. Here we draw a distinction between *blocking* and *tripping:* while the language of the industry in not standardized, here *blocking* refers to stopping operation of the device, using blocking firing of power electronics, due to voltage or frequency being out of an acceptable range, but with the expectation that operation will resume. In contrast, tripping refers to stopping operation of the device with the expectation that it will not resume operation in the timeframe of a transient stability event, regardless of whether system voltage and frequency return to within an acceptable range. Thus, a further part of the logic allows specification of how much *blocked* DG will recover if the excursion returns within the user input bounds. The result is a high level of flexibility for modeling fault ride-through. However, the model does not support user input time delays on the blocking functions, and so is limited in its ability to reflect deliberate time thresholds for tripping (e.g., as in NERC low voltage ride through (LVRT) and IEEE 1547 standards).

LOAD MODEL IMPACT ON FAULT INDUCED DELAYED VOLTAGE RECOVERY

The impact of load behavior on the phenomena of fault induced delayed voltage recovery (FIDVR) [6], is of great concern. The results of a 3-phase fault at Vincent on the Midway-Vincent 500 kV in California for the Heavy Summer case are shown in Figure 2. This is a major interconnector that is in close electrical proximity to many GW of load in California. Load that today already has huge, and growing, amounts of embedded PV. The fault is cleared by tripping two Midway-Vincent lines in 6 cycles. In the figure, the original case (blue trace) with WECC standard load modeling (20% induction motor, 80% static) exhibits fast voltage recovery and a stable response. The Base case (red trace), with 143.9 GW composite load, fails to recover. There is a dynamic voltage collapse caused by motor stalling in the composite load about 3 seconds after the fault clears. This is an extreme case of FIDVR. The difference shows that load behavior dominates system response for this event.

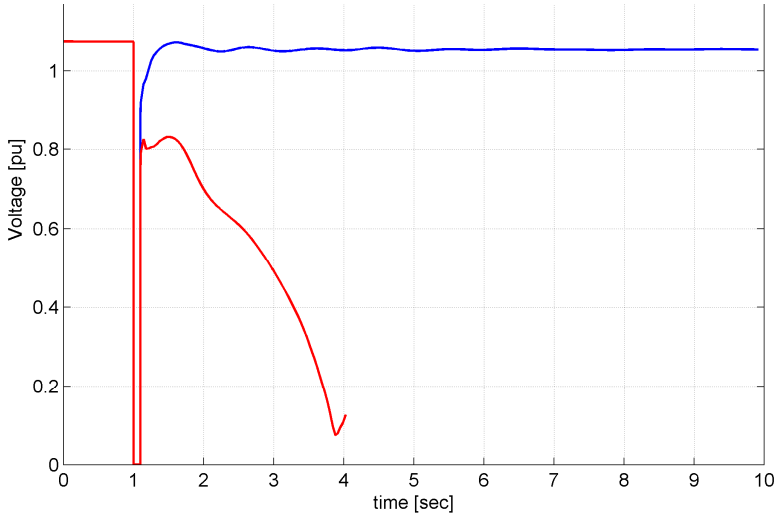

Figure 2. Load-induced voltage collapse

Impact of Distributed PV on Motor Load Stall induced Voltage Collapse.

To examine the relative impact of renewables, and particularly the distributed PV, a comparison of the HS Base case (blue trace) and the HS Hi-Mix case (red trace) is shown in Figure 3. The Hi-Mix case collapses about twice as fast.

Two factors contribute to the faster collapse in the Hi-Mix case. One contribution is the low voltage blocking of the distributed PV inverters during the voltage depression. The inverters are modeled to maintain full output down to 80% voltage; between 80% and 70% they begin to block. Below 70%, they fully block, recovering only when the voltage recovers. Modeling this behavior is a proxy for the fact that smaller inverters generally cannot continue firing during deep voltage depressions. In this context blocking is distinct from tripping. Tripping is removes the inverter from operation, so that it will not recover when the voltage returns following clearing of the fault. This could be done to inverter limitations, or it could be deliberate, such as in response to default requirements of IEEE 1547. In this case, about half of the PV, 4.4 GW of 9.3 GW, blocks during the fault. The vast majority of that generation is near the fault, in the LADWP and SCE areas. Blocking the local current injection of the PV exacerbates the stalling behavior of the motors, making the event somewhat more severe.

A second factor is that the displacement of synchronous generation by renewables was expected to reduce the system strength in the vicinity of the fault. Reduced system strength is known to aggravate FIDVR. A good proxy for system strength is short-circuit current levels. However, when examined, the fault current level was found to be nearly identical for the two cases. This suggests that the PV blocking, which causes additional current to be drawn from the bulk power system, is the dominant factor in the difference between the cases.

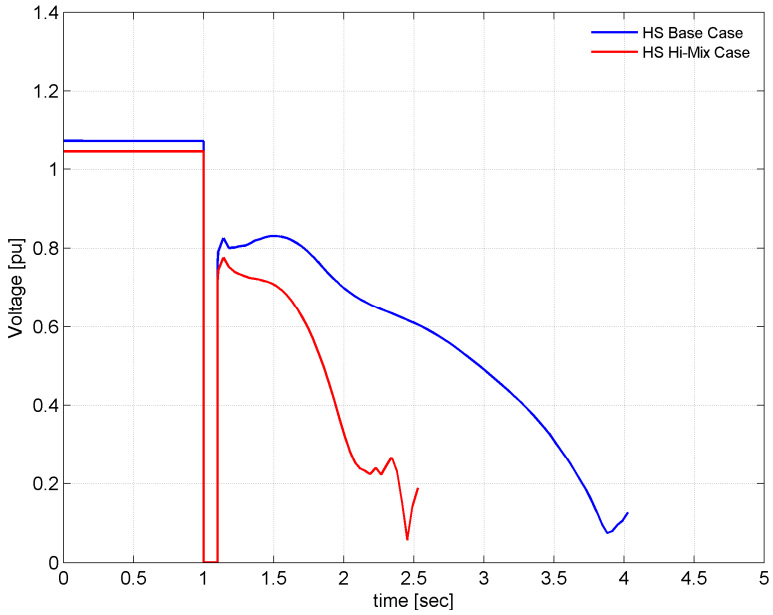

Figure 3. Voltage collapse for Midway-Vincent fault - HS Base vs. Hi-Mix.

The depth of the voltage depression that causes the motors in the composite load model to decelerate is a function of the location and severity of the fault. A case in which the Midway fault impedance is included to approximate a one-phase fault results in no FIDVR. The voltage and the load recovered within 50 ms of fault clearing. The DG blocking was reduced to about 900 MW. With this single-phase fault equivalent, the difference in the characteristic of the successful recovery between the Base case and Hi-Mix case was small. The Hi-Mix recovery is slightly faster. This suggests that the distributed PV is actually beneficial in this case, reducing distribution feeder loading before the fault and thereby enhancing the ability of

the motors to avoid stalling. In short, it appears that as long as the distributed PV does not trip, it is beneficial to stability of the loads.

Details of Composite Load Model Behavior

The dynamics of the composite load model are considerably more complex than the standard WECC load model, and as shown, dominate the system behavior for some faults. The details of the behavior of two of the composite loads for the unstable Midway-Vincent fault are shown in Figure 4. Two buses are shown: one in southern California that is close to the faulted bus, and another in Arizona, remote from the fault. The voltage never recovers for the bus near the fault. The remote bus finally collapses as the entire system goes unstable at around 2 seconds. The simulation after that point is meaningless, and the plot is truncated. In Figure 5, the details of these two loads are shown, with the red trace being the load near the fault. The dynamic part of the load, as represented by one of the four motor equivalents, is ill-mannered, with an aggressive but failed attempt to recover on fault clearing driving up the reactive power consumption. Some load reduction is observed in the static and electronic components, but it is insufficient to save the system. The drop out of the PV shown in the bottom left plot, exacerbates the problem. When the fault clears, the voltage does not recover enough for the distributed PV to restart. Had some of the motor load been allowed to trip (see discussion above), the system would likely recover. That behavior would, however, make the impact of the incremental wind and solar extremely difficult to discern.

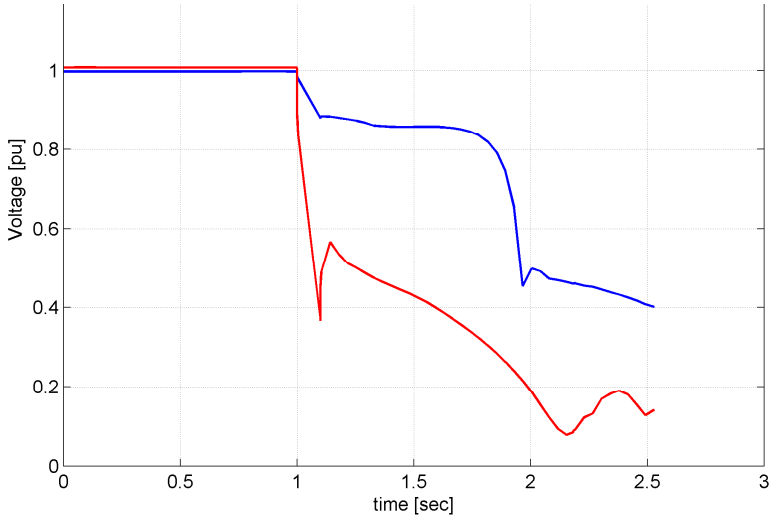

Figure 4. Load bus voltages at different distances from fault location.

The conclusion is that with this load modeling the system is on the edge, regardless of renewable generation. The behavior of the system is completely dominated by the load model, and more specifically by the trip vs. stall behavior assumed for the motor models. Drop-out of the distributed PV during the voltage depression exacerbates the problem, as does the fact that voltage stays low enough to prevent the DG from restarting after the fault clears. This is an extraordinarily complex issue for planning and for research. However, this stability risk is not primarily one of renewable integration on the bulk power system. Overall, the utility-scale renewables have relatively little impact on voltage recovery here, especially compared to the sensitivity and uncertainty of the load modeling. The ride-through and recovery characteristics of the embedded PV contribute to the motor stall as modeled, which suggests that PV controls designed to address this behavior could be beneficial. Further investigation of the load behavior, the motor tripping, and the behavior of the PV DG is warranted.

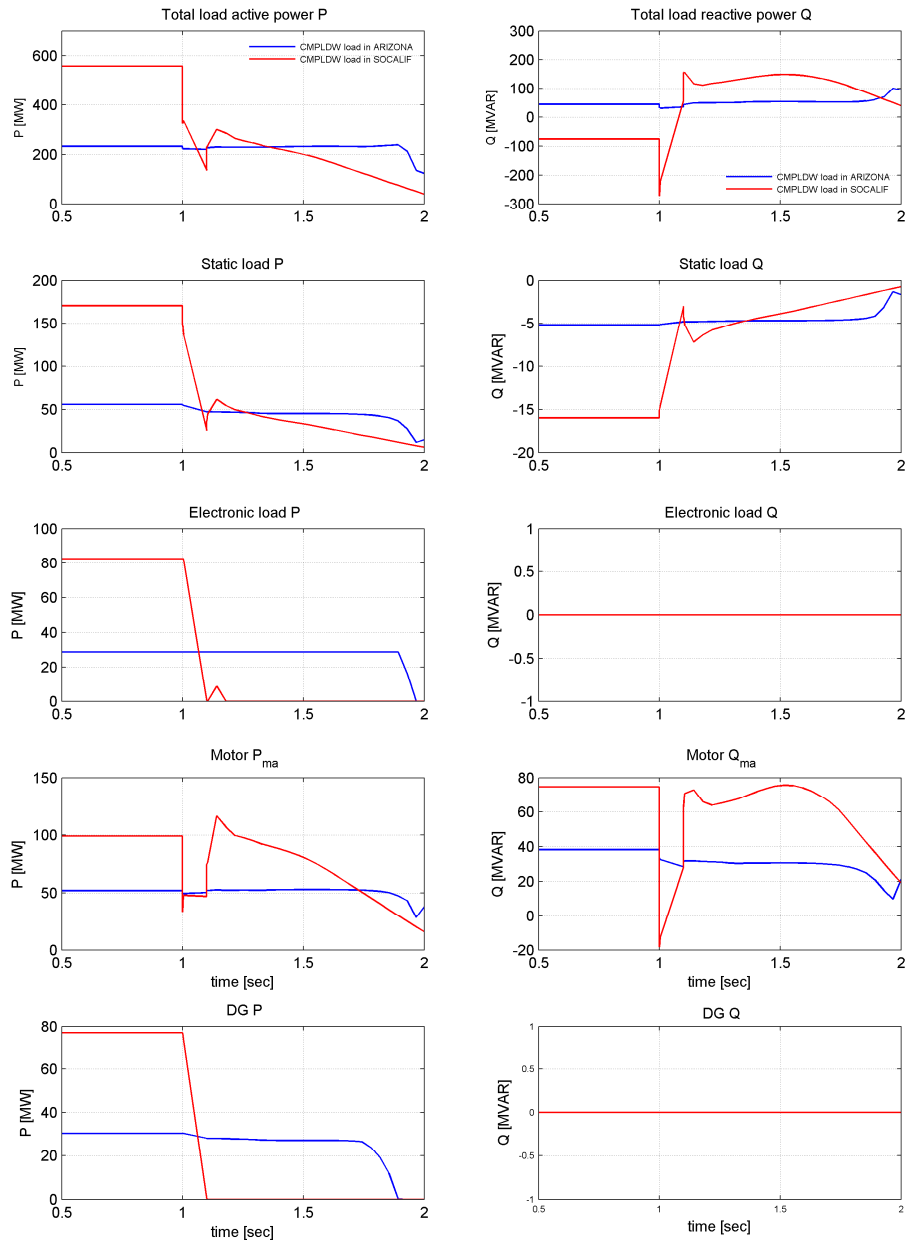

Figure 5. Details of load behavior relative to fault proximity.

IMPACT OF SOLAR PV RIDE-THRU BEHAVIOR.

One aspect of particular concern is that distributed generation of all types, but especially inverter-based devices like PV, can stop abruptly when there is a disturbance on the grid. This tripping can be deliberate, in order to avoid the risk of inadvertent islanding, as mandated by the old IEEE standard 1547. But it can also be inadvertent, when inverters are insufficiently robust to continue operation when the voltage at their terminals departs from either nominal magnitude or frequency. In either case, widespread tripping of DG in response to a large disturbance has the potential to exacerbate a disturbance.

A rather pessimistic test was performed in which all distributed PV in the system was assumed to have very poor low voltage ride-through characteristics. The system was subjected to a trip of the Pacific DC Intertie. The PV was modeled as tripping (as distinct from just blocking) when the voltage at the device drops below 88% of nominal, as allowed by old IEEE standard 1547. Below 83%, all the current is stopped and is not allowed to recover. This is allowed under IEEE 1547, but normally a time delay of up to 2 seconds would be imposed before the DG is deliberately tripped.

That event results in large power swings and accompanying large voltage swings. For the reference case where the distributed PV had adequate low-voltage ride-through, the system tolerates the disturbance. But, when there is substantial common-mode tripping of the distributed PV due to the widespread voltage swing, the loss of the generation causes a system separation and collapse. The result of DG tripping during the power swing is to exacerbate the voltage stress and cause the system to lose synchronism, as shown in Figure 6.

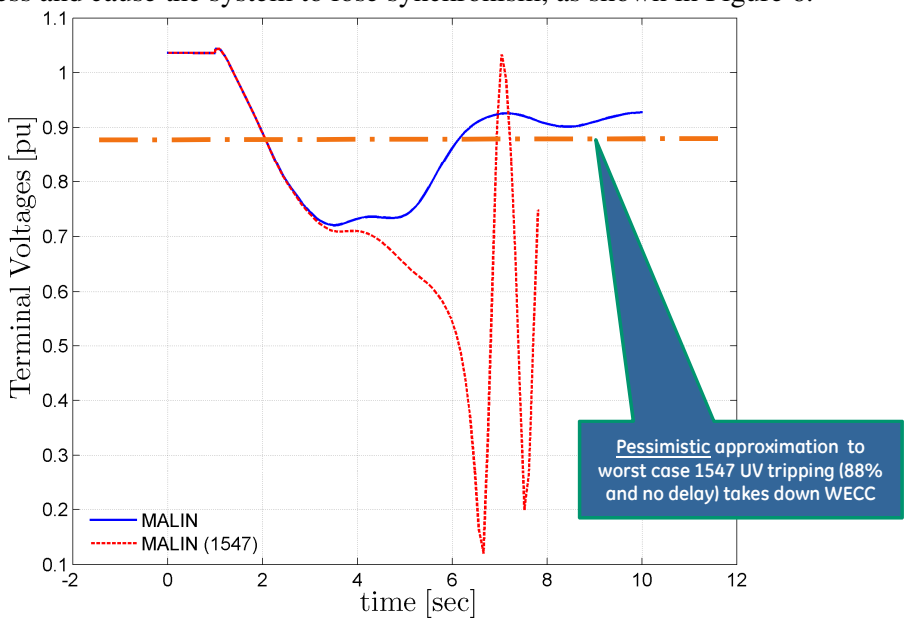

Figure 6. Destabilization due to DG tripping on voltage dip.

This is one of the risks associated with distributed generation that motivated the recent revision of IEEE standard 1547. There is now an avenue open by which this risk can be mitigated, at least to the extent of managing intentional tripping so as not to create bulk power system reliability risks. The behavior of composite system loads co-located with PV is complex. Understanding is improving, but is by no means complete. If systems continue the trend towards more reliance on highly distributed generation, practice will need to continue to adapt.

IMPACT OF DISTRIBUTED PV RECOVERY

For the single-phase fault at Midway presented above, about 825 MW (out of 9.4 GW) of distributed PV blocked during the fault and then recovered following the fault. A sensitivity case in which the blocked PV does not recover was run. (In this sense, blocking and failing to recover is functionally indistinguishable from tripping, although the mechanisms by which this behavior originates may be different). This simulates DG tripping due to physical limitations (i.e., a sympathetic trip) or deliberately (i.e., to comply with IEEE 1547 or other objectives).

Even with the loss of this DG, the system is stable and voltages recover. The majority of the lost active power is picked up by responsive generation. Voltage recovers slightly slower to a level 1.2% lower with tripped DG. More dramatically, the tripping of the DG has a large impact on the reactive power balance. In the post-fault-clearing condition, the 825 MW of tripped DG "costs" the system about 3100 MVAr – almost 4 MVAr/MW. This is indicative of a significant level of system stress. This result suggests that inadvertent or deliberate tripping of DG during system disturbances may have significant voltage stability effects. These effects could be more problematic than frequency impacts.

CONCLUSIONS

The dynamic behavior of distributed PV generation has the potential to substantially impact the bulk power system. Distribution is not decoupled from transmission, and will impact bulk power system operation. From a transient stability perspective, the system appears to tolerate substantial displacement of thermal generation. But, poor dynamic behavior of loads can create significant stability concerns. Failure of embedded photovoltaics (or other distributed generation) to operate through and, especially immediately after, system faults can greatly exacerbate poor load dynamic behavior. In the extreme, such poor behavior can cause system-wide cascading failures. Failure of distributed generation to ride-through disturbances can also cause acute shortages of reactive power and accompanying voltage stability problems. Further, the investigation suggests that sensitivity of load active power to voltage changes may have a more profound effect of bulk system frequency response than load frequency sensitivity. This has potential to impact compliance and strategies for meeting frequency response obligations. Conversely, it appears that as long as the distributed PV does not trip, it is beneficial to stability of the loads.

While every grid has its own unique dynamic characteristics, there is also a great deal of commonality: basic physics doesn't change between grids. These conclusions apply broadly to other grids.

BIBLIOGRAPHY

[1] NREL "Western Wind and Solar Integration Study Phase 3 – Frequency Response and Transient Stability"; http://www.nrel.gov/docs/fy15osti/62906.pdf (full report)

[2] NREL. "Western Wind and Solar Integration Study, Phase 2", NREL/SR-550-55888, September 2013.; http://www.nrel.gov/docs/fy13osti/58077.pdf

[3] NREL "Eastern Frequency Response Study", June 2013; http://www.nrel.gov/docs/fy13osti/58077.pdf

[4] NREL "Western Wind and Solar Integration Study Phase 3a – Low Levels of Synchronous Generation" December 2015. http://www.nrel.gov/docs/fy16osti/64822.pdf

[5] WECC (2012). Composite Load Model for Dynamic Simulations. Report 1.0. WECC Modeling and Validation Work Group. Accessed February 23, 2013: http://www.wecc.biz/committees/StandingCommittees/PCC/10102012/Approval%20Items/1/WECC%20MVWG%20Load%20Model%20Report%20ver%201%200.pdf.

[6] NERC (2009). A Technical Reference Paper: Fault-Induced Delayed Voltage Recovery. Ver 1.2, June.