21, rue d'Artois, F-75008 PARIS
http : //www.cigre.org

2016 CIGRE International Colloquium

Test Bench Validation of an Excitation Booster for Enhancement of Fault Ride Through Capability of Synchronous Generators

L. DIEZ-MAROTO, L. ROUCO, F. FERNANDEZ-BERNAL
Universidad Pontificia Comillas
Spain

J. MENZEL, I. EL-MERDAOUI, O. MALCHER
GE Power
Switzerland

SUMMARY
This paper describes the test bench validation of an ultracapacitor based excitation booster aimed at improving the fault ride through capability of synchronous generators equipped with bus fed static excitation systems. A test bench based on a 10 kVA synchronous generator has been developed. Tests have demonstrated that the excitation booster is able to improve the fault ride through capability of synchronous generators.

KEYWORDS
Fault Ride Through Capability, Bus Fed Static Excitation System, Ultracapacitor, Excitation Booster.

rouco@comillas.edu

1 INTRODUCTION

Fault Ride Through Capability (FRTC) refers to the ability of generators to remain connected to the grid in case of grid faults. FRTC was firstly imposed to wind generators [1] and it has been subsequently requested to any kind of generation facilities including synchronous generators [2]. FRTC has been incorporated to grid codes worldwide adding new requirements with respect to IEC [3] and IEEE [4] standards for synchronous generators. GE Power (formely Alstom Power) patented an ultracapacitor-based Excitation Booster (EB) aimed at improving the FRTC of synchronous generators equipped with bus fed static excitation systems ([5], [6]). In other words, the EB allows synchronous generators to withstand longer faults without losing synchronism. GE commissioned Universidad Pontificia Comillas the experimental validation of the EB concept together with its modeling, sizing and controller design. Although the value of the concept has been checked by transient stability simulations [7], the test bench validation is intended to check aspects that are not shown by such simulations. Transient stability simulations not only neglect synchronous machine stator and network transients but the waveform of the field voltage due to the thyristor bridge of the bus fed excitation system (approximated by its average value), and many other practical aspects.

This paper describes a small-scale (10 kVA) test bench developed for the experimental validation of the EB concept. Moreover, it will investigate the feasibility and performance of EB control algorithms in a real environment. The paper is organized as follows. Section 2 explains the EB concept. Section 3 describes the test bench and its components. Section 4 details the most relevant results obtained from the test bench operation. Section 5 provides the conclusions of the paper.

2 AN ULTRACAPACITOR BASED EXCITATION BOOSTER FOR BUS FED EXCITATION SYSTEMS

Bus fed static excitation systems are based on a thyristor bridge fed from generator terminals through an excitation transformer. Although they are the fastest and simplest excitation systems, the FRTC of generators equipped with them is impaired if a fault close to the generator terminals occurs. The reduction of the terminal voltage due to the fault results in a reduction of the field voltage and, therefore, in a reduction of the already low electromagnetic torque applied by the machine to the rotor. Meanwhile, as the mechanical torque from the turbine remains almost constant, the rotor accelerates. GE patented an Excitation Booster (EB) aimed at improving the FRTC of synchronous generators equipped with bus fed static excitation systems. Fig. 1 depicts a synchronous generator whose field winding is fed by a bus fed excitation system and the EB. The EB is made up of an ultracapacitor, an IGBT and a diode.

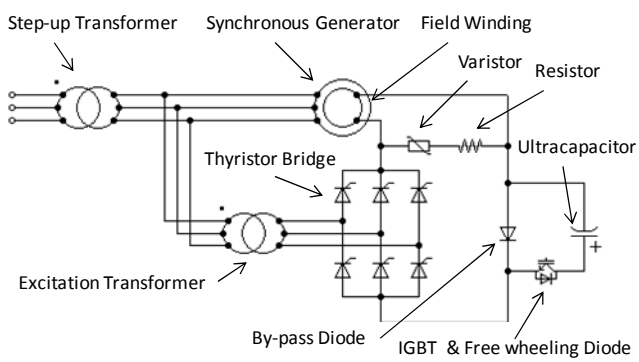

Fig. 1. Bus fed static excitation system with excitation booster

The operating principle of the EB is as follows. During normal steady state operation of the synchronous generator, the IGBT that controls the EB is switched off and therefore the ultracapacitor remains disconnected from the field winding and the field current flows through the diode. However, if a fault occurs and a voltage sag is detected, the IGBT is switched on. As the ultracapacitor voltage polarity is connected in such a way that the diode's anode-cathode voltage becomes negative, the diode instantaneously disconnects from the circuit, flowing the field current through the ultracapacitor. Therefore, the excitation voltage is increased by adding the ultracapacitor's voltage to thyristor bridge

voltage.The effective application of the EB depends critically on a rapid detection of the voltage sag and EB connection.

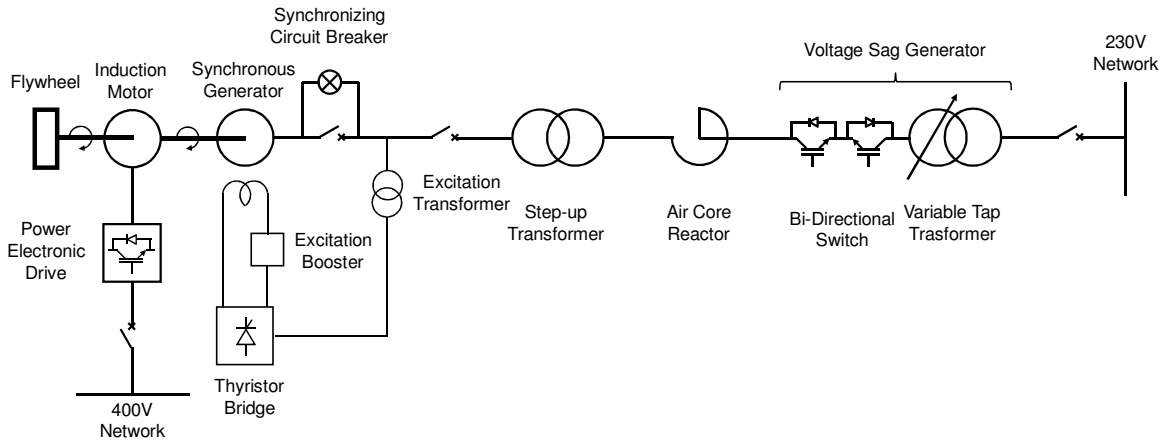

Fig. 2. Single line-diagram of the test bench

3 DESCRIPTION OF THE TEST BENCH

A small-scale (10 kVA) three phase test bench that exhibits the fundamental features of a synchronous generator equipped with a bus fed static excitation system has been developed to test experimentally the EB concept. The test bench includes a Voltage Sag Generator (VSG) to reproduce the behavior of the grid during a fault. Fig. 2 shows a single-line diagram of the test bench. Fig. 3 shows an overview of the test bench set up in the laboratory. The test bench components are from right to left hand side:

- Voltage Sag Generator (VSG)
- Step-up transformer and a air-core series reactor
- Synchronous machine
- Synchronous machine excitation system, which is made up of the excitation transformer and the thyristor bridge
- Excitation Booster (EB)
- Turbine emulator, which is made up of the power electronic drive, the induction motor and the flywheel
- SCADA system (not shown in Fig. 2)

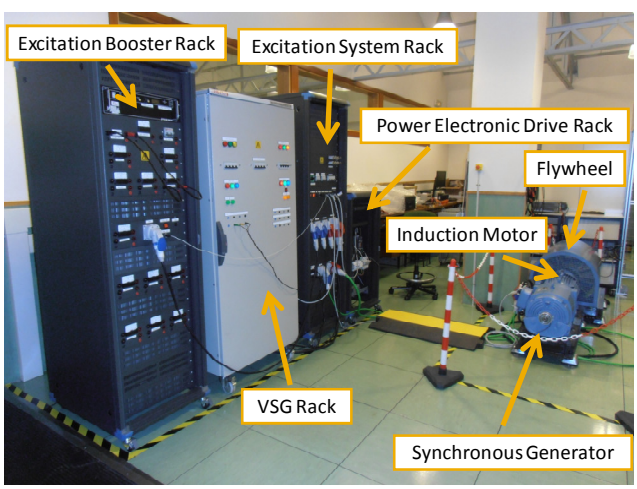

Fig. 3. Test bench

3.1 Voltage Sag Generator (VSG)

The Voltage Sag Generator (VSG) is aimed at safely emulating voltage sags without disturbing the grid. Therefore, it is placed between the grid and the generator step up transformer as shown in Fig.

2.This piece of equipment has been designed, developed and assembled as part of this project and it is the first prototype of its kind. It has been foreseen to faithfully reproduce the behavior of an actual fault. The VSG is conceived as a three phase electronically controlled On Load Tap Changer Transformer (OLTC) to apply voltage sags at the grid side of the step-up transformer. The taps are commuted by IGBT based bidirectional switches that can switch in less than 1µs. Although more types of faults are possible, in this work a three phase voltage sag of 5% of retained voltage is reproduced in the following way: in steady state the generator is fed through a tap with a transformer ratio 1:1. Suddenly it is switched into a tap with a transformer ratio of 1:0.05 and then back into the post-fault tap 1:1. In such a fault the three phases of each tap are switched exactly at the same time.

3.2 Step-up transformer and air-core series reactor

The step-up transformer is three phase 10 kVA, 230 V/400 V. The leakage reactance of 0.02 pu in its own kVA base. To achieve a more realistic value of the step-up transformer reactance (0.12 pu) in its on kVA base, an air core reactance (0.10 pu in the transformer kVA base) has been installed in series.

3.3 Synchronous generator

The synchronous generator of the test bench is three phase 50Hz, 1500 rpm, 10 kVA, 400 V machine supplied by Letag (model 10LCE-160L14). The field winding is fed through slip rings. The field voltage and the field current that produces nominal voltage under no load are 10.99 V and 1.12 A respectively. The rating of the test bench is determined by the rating of the synchronous machine. The remaining components of the test bench are sized accordingly.

3.4 Synchronous Machine Excitation system

A bus fed static excitation system has been implemented in the test bench as shown in Fig. 2. It is made up of an excitation transformer, a full controlled rectifier, the rectifier driver, an Automatic Voltage Regulator (AVR), a reactive power regulator and a crowbar. The excitation transformer is connected to the generator terminals and has an apparent power of 6 kVA, a transformer ratio of 440 V/63.5 V and a leakage impedance of 0.12 pu in its own kVA base. The transformer ratio has been selected in order to provide the excitation system with a ceiling factor of 77.95 V which is equal to 7.09 pu of the no load field voltage (non reciprocal base). The rectifier is a three phase thyristor bridge that has been designed to deliver the maximum field voltage and to withstand the transient currents and voltages. The rectifier is protected from switching overvoltages by snubbers that are no represented in the pictures. Additionally a simplified crowbar has been installed in order to protect both the rotor insulation and the excitation system power electronics. It is made up of a varistor with a clamping voltage of 150 V and a resistor of 1 Ω.

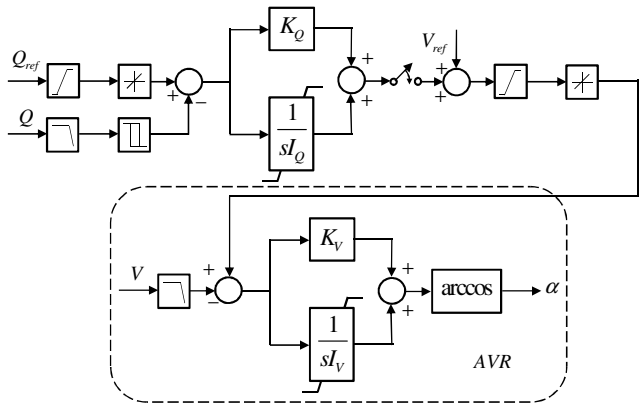

Fig. 4. Excitation system controllers.

The AVR has been implemented in the Digital Signal Processor (DSP). It is a PI control. The AVR receives as input the reference voltage and the RMS terminal voltage and generates an output that is sent to the driver of the rectifier in order to regulate the field voltage The reference voltage is generated by an outer control loop, the reactive power control, Q. It compares the reactive power reference with the measured reactive power and generates a voltage reference that is imposed to the

AVR (enclosed in Fig. 4). During a voltage sag, the reactive power experiments large excursions that can modify the test outcome, so the voltage reference, V_{ref}, is kept constant during the whole transient in order to avoid those undesirable effects. Although both controls have been implemented in the discrete time domain, Fig. 4 shows them in the continuous time domain block diagram representation for the sake of simplicity.

3.5 Excitation Booster

The EB is made up of a bypass diode, an IGBT, an ultracapacitor, an IGBT driver and an EB control. It should be noted that a free-wheeling diode is integrated in the IGBT, for protection reasons. The ultracapacitor that is tested is the BMOD0083 P048 B01 Maxwell module. It has a rated voltage of 48.5 V and a capacitance of 83 F, which in the non reciprocal base are respectively 4.4 pu and 813 s. The ultracapacitor voltage has a direct impact on the generator stability. The larger the ultracapacitor voltage is, the greater the critical clearing time. However, it must be ensured that the ceiling factor plus the ultracapacitor voltage remain below the rotor insulation limit, which in this generator is 250 V. Although the rotor insulation would have withstood two modules in series, it has been tested only one as a first step. The capacitance value is related to the discharge rate of the ultracapacitor. Simulations have shown that a capacitance between 1-4 seconds is enough to keep the ultracapacitor voltage within 10% of its initial value [9]. The large capacitance value that is used in the test bench is due to two main reasons, the large value of the impedance base in the non reciprocal system (9.8 Ω) and the absence of lower capacitances for those voltages. Due to technological reasons there are no commercial ultracapacitor modules of such small capacitances as long as they are made up of cells with voltages of 3 V and capacitances of 3000 F. Therefore, the ultracapacitor capacitance is oversized in the test bench and the discharge rate is almost zero. The EB control is based on the discrete control of [6] but includes further developments that have been implemented in the DSP. Voltage sags are identified within 5 ms by means of a fast detection algorithm based in dq axis that generates an RMS value of the terminal voltage [10]. If the terminal voltage drops below 0.9 pu, then the IGBT is switched on and the ultracapacitor is connected to the field winding. Conversely if it rises above 0.9 pu the IGBT is switched off and the ultracapacitor is disconnected from the excitation circuit.

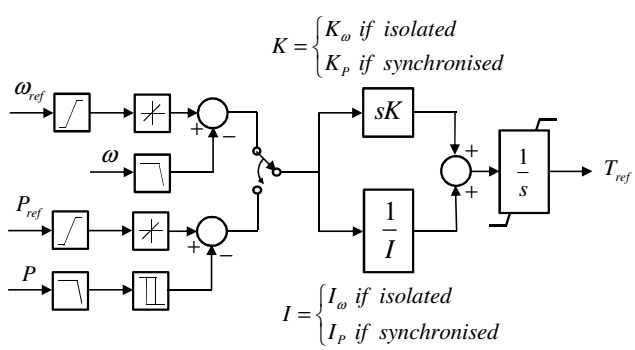

Fig. 5. Turbine emulator controllers.

3.6 Turbine emulator

The mechanical torque is supplied by the turbine in an actual generating unit. According to [11] the mechanical torque from the turbine remains nearly constant during and after a fault. Hence, the turbine emulator has been conceived as a device whose torque can be controlled. The turbine emulator is made up of a power drive, an induction motor and a flywheel. The Sinamics S120 power drive from Siemens [13] feeds and controls the induction motor that is connected through the shaft to both, the synchronous generator and the flywheel as shown in Fig. 2. The induction motor is IEC 160M-B3.6 model from Letag. The ratings of both, the induction motor and the power drive are 400 V, 20.8A and 11 kW. The power drive includes a torque vector control that can fix almost instantaneously the torque delivered by the induction motor. The torque control offers wide possibilities to emulate different processes that might appear in the turbine. The torque reference that serves as an input to the power drive is generated by a turbine control that has been implemented in the DSP as shown in Fig. 5. This control receives either the speed or the active power error, depending whether the generator is isolated

or synchronized to the grid. The PI control with gain scheduling has been implemented in its incremental form [12] to allow a smooth transition between the two sets of parameters. Although both controllers have been also implemented in the discrete time domain, Fig. 5 shows them in the continuous time domain block diagram representation for the sake of simplicity. During a voltage sag, the active power exhibit large excursions that might interfere in the turbine control. Therefore, the torque reference, T_{ref}, is kept constant before the voltage sag is applied and during the subsequent transient in order to ensure that the mechanical torque from the turbine emulator remains constant. The flywheel is used to increase the total inertia of the shaft line up to 6.5 seconds as long as the inertia provided by the synchronous generator and the induction motor is too small compared to the inertia of a turbine generator rotor. The three masses are coupled by two semi-rigid couplings.

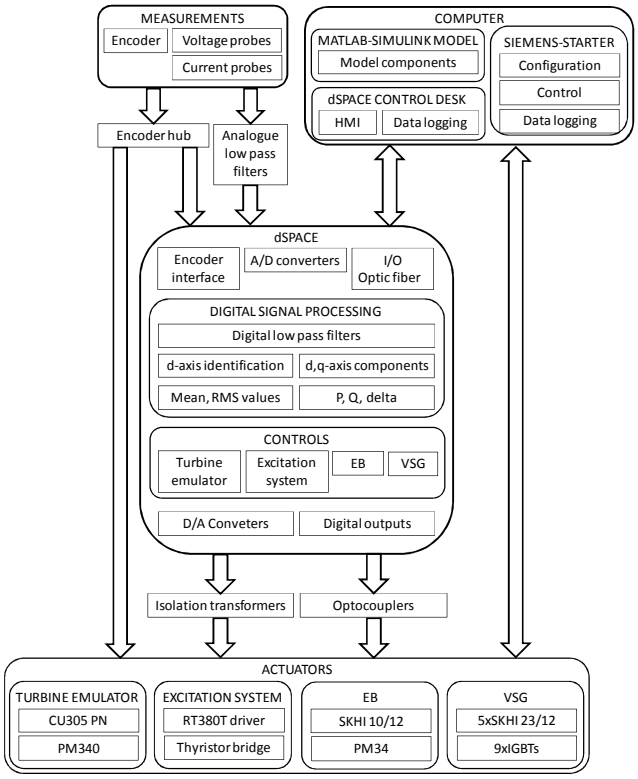

Fig. 6. SCADA system and I/O devices

3.7 SCADA system

The Supervisory Control And Data Acquisition (SCADA) system is made up of a DSP, measurement probes, a computer and several actuators. Fig. 6 shows the components and relationships of the SCADA components and the input/output sources. The controls have been implemented in a DSP; the dSPACE DS1103 platform [8]. The human machine interface (HMI) has been implemented in a computer through the DS1103 control desk software. Fig. 7 displays a detail of the control panel that is used to govern the whole test bench.

4 RESULTS

This section shows firstly the test bench response in case of a voltage sag in two cases: without the EB and with the EB. Then, the improvement of the critical clearing time due to EB is investigated experimentally. All experiments are conducted when the generator was delivering 0.85 pu of active power at a lagging power factor of 0.86.

4.1 Test bench response without and with EB

The response of the test bench with and without EB in case of a voltage sag of 5% of retained voltage for 400 ms is firstly provided. Fig. 8 left compares the terminal voltage and the field voltage with no EB and with EB. The connection of the EB during the fault raises both the field voltage and the

terminal voltage. Although the voltage sag has the same profile in both cases, a significant increase of the terminal voltage is observed when the generator equipped with the EB due to the field voltage increase. Fig. 8 right compares the rotor angle and the rotor speed with no EB and with EB. The increase of field voltage with EB results in an increase of the electromagnetic torque that reduces the acceleration during the voltage sag. The effect on the angle is particularly remarkable. The angle of the generator with EB increases about 50 degrees less than the angle of the generator without EB for the same fault. The lesser the angle increases, the farer the generator is from the loss of synchronism.

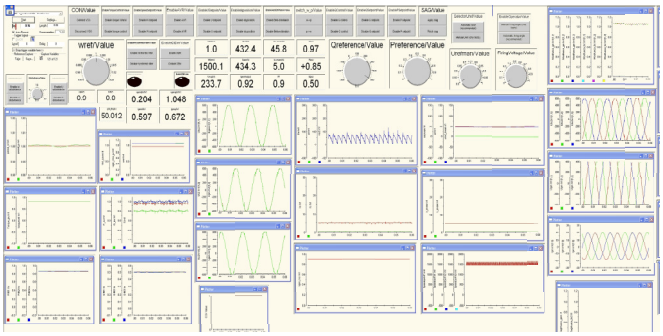

Fig. 7. Human-Machine Interface (HMI) detail

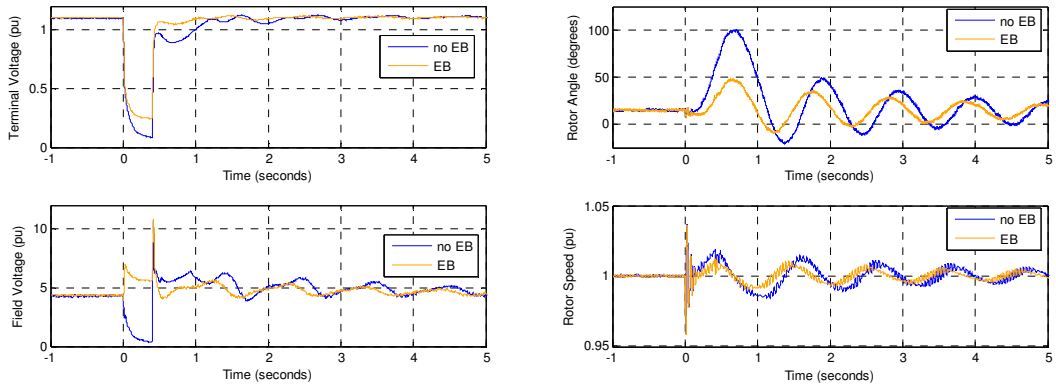

Fig. 8: Terminal voltage and field voltage (left) and rotor angle and speed (right) in case of a three phase voltage sag of 5% of retained voltage and 400 ms of duration with EB and with no EB.

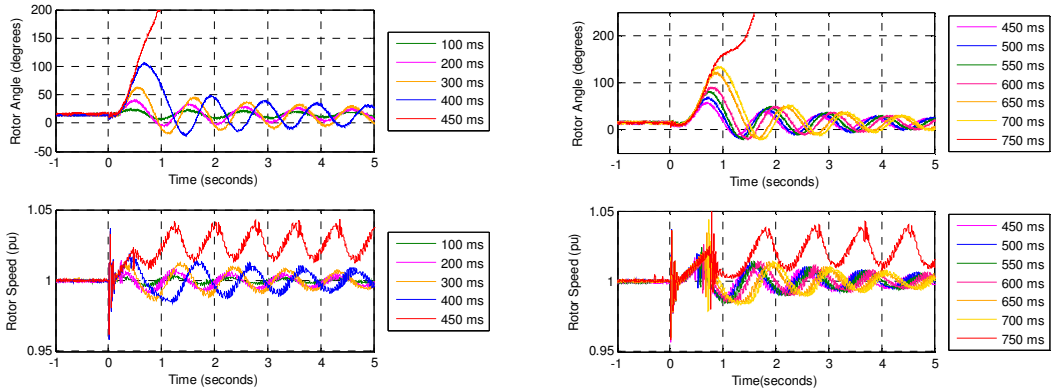

Fig. 9: Critical clearing time determination of a generator delivering 0.85 pu of active power at a lagging power factor of 0.86 after a voltage sag of 5% of retained voltage at transformer's grid side: no EB (left) and EB (right).

4.2 Transient stability improvement with EB

The critical clearing time is the maximum time that a generator can withstand a fault without losing synchronism. FRTC as formulated in grid codes requires that the generator must sustain a fault

without losing synchronism. Therefore, the critical clearing time of the generator must be greater than the fault duration time imposed by the FRTC requirement. The EB contribution can be computed by measuring and comparing the critical clearing time of a generator with and without EB. Critical clearing times have been determined experimentally by increasing the voltage sag duration in steps of 50 ms. Fig. 9 shows the experimental calculation of the critical clearing time with no EB (left) and with EB (right). The EB has been able to increase the critical clearing time from 400 ms to 700 ms.

5 CONCLUSIONS

A 10 kVA test bench that reproduces the relevant behavior of a synchronous generating unit in case of voltage sags has been developed and assembled to test the EB concept patented by GE. The results of a number of tests have been shown. The tests have proved the value of the EB concept to enhance the fault ride through capability of synchronous generating unit equipped with bus fed excitation system for generator's transient stability, solving some of the limitations of the bus fed static excitation system. Furthermore, the critical clearing time improvement due to EB contribution in this test bench is 75% for a voltage sag of 5% of retained voltage. The critical clearing time improvement depends on factors such as the machine inertia and short circuit ratio, transformer impedance and grid short circuit capacity. Such improvement has to be determined in each actual application.

BIBLIOGRAPHY

[1] F. Van Hulle, "Grid codes: The Manufacturer´s Nightmare", Proceedings of EWEC, Warsaw, Poland, 20 - 23 April 2010.

[2] L. Rouco, C. Ginet, K. Chan, K. Major, O. Malcher, L. Díez-Maroto, R. Cherkaoui, "Voltage Ride Through Capability of Synchronous Generators: Grid Code Requirements and Sensitivity with Respect to Generator Parameters", Cigré Study Committee A1 Meeting 2009, 20 - 25 September 2009, Sidney, Australia.

[3] IEC, International Standard: Rotating electrical machines, Part 3: Specific requirements for synchronous generators driven by steam turbines or combustion gas turbines, IEC Standard 60034-3.

[4] IEEE, IEEE Standard for Cylindrical-Rotor 50 Hz and 60 Hz Synchronous Generators Rated 10 Mva and Above, IEEE Std C50. 13-2005,

[5] R. Joho, "Static energising system for a generator and method for operation of such an energising system", Patent No. WO 2006/045703 A1, 4 May 2006.

[6] C. Ginet, L. Diez-Maroto, "Static exciter of a field winding and method for operating the same", Patent No. EP 2 288 017 A1, 23 February 2011.

[7] L. Rouco, C. Ginet, K. Chan, K. Major, O. Malcher, L. Díez-Maroto, R. Cherkaoui, "Improvement of the Voltage Ride Through Capability of Synchronous Generator by Excitation Control", 43 Cigré Session, paper A1-106, Paris, France, 22 – 27 August 2010.

[8] dSPACE, DS1103 User Manual, www.dspace.com.

[9] L. Díez-Maroto, Improvement of Voltage Ride Through apability of Synchronous Generators with Supplementary Excitation Controllers. Master thesis, Universidad Pontificia Comillas, 2013.

[10] J. Roldan-Perez, Application and Control of Series Active Conditioners in Electrical Distribution Systems. PhD thesis, Universidad Pontificia Comillas, 2015.

[11] P. Kundur, Power System Stability and Control, Mc Graw Hill, 1994.

[12] P. J. Åström and T. Hägglund, Advanced PID Control, ISA, 2006.

[13] Sinamics S120 AC Drive. Manual. Available from https://support.industry.siemens.com/cs/document/68045304?dti=0&lc=en-WW.